MATHEMATICAL REASONING (MATHEMATICAL LOGICS)

Aieee 2012 Reasoning . To learn the AIEEE Short Cuts and Reasoning Go Through the Given Exercise.

1. The negation of the statement **(AIEEE 2012)**

"If I become a teacher, then I will open a school", is :

(1) I will become a teacher and I will not open a school.

(2) Either I will not become a teacher or I will not open a school.

(3) Neither I will become a teacher nor I will open a school.

(4) I will not become a teacher or I will open a school.

Ans. (1)

Sol :

Let p : I become a teacher

q : I will open a school

Negation of $p \to q$ is $\sim (p \to q) = p \wedge \sim q$

i.e. I will become a teacher and I will not open a school.

INTRODUCTION

The dictionary meaning of 'Logic' is the 'science of reasoning'. The language of mathematics is very neat and concise and surpasses every other language in its precision and bravity. The study of logic through the use of mathematical symbols is called mathematical logic. The mathematical logic is also called 'symbolic logic'. Since symbols are abstract and neutral, they give clear expression to our thoughts. The mathematical approach to logic was first

propounded by British mathematician George Boole. On this account, the mathematical logic is also called Boolean logic.

STATEMENT

An sentence is called a statement if it is either true or false but not both.

Statements are denoted by letters p, q, r.....

Illustrations, (i) 2 + 6 = 8 is a statement because it is true.

(ii) Calcutta is in England is a statement because it is false.

(iii) 'Where are you going ?' is not a statement because it is neither true nor false.

(iv) '7 divides 92' is a statement because it is false.

(v) 'Two individuals are always related' is a statement because it is false.

(vi) 'Today is Sunday' is not a statement because it is neither true nor false. On the other hand, the sentence, 'On monday it can be said that it is Sunday' is a statement because it is a false sentence.

(vii) 'The equation $ax^2 + bx + c = 0$ always has real roots' is not a statement because it is neither true nor false, (∵This equation may also admit non–real roots).

(viii) 'The equation $ax^2 + bx + c = 0$ where $a, b, c \in R$, $b^2 - 4ac \geq 0$ has real roots' is a statement because it is true.

TRUTH VALUE OF A STATEMENT

We know that a statement is either true or false. The truth or falsity of a statement is called its truth value. If a statement is true then its truth value is denoted by ' T' and if a statement is false then its truth value is denoted by 'F'.

Illustrations, (i) The truth value of the statement '2 + 3 = 6' is F, because this statement is false.

(ii) The truth value of the statement '64 is the square of 8' is T, because this statement is true.

WORKING RULES FOR SOLVING PROBLEMS
Rule I. A sentence is a statement if it is either true or false but not both.
Rule II. The truth or falsity of a statement is its truth value.

Exercise 1

1. Which of the following sentences are statements:

(i) 10 divided by 2 gives 5.

(ii) It may rain today,

(iii) London is in America.

(iv) He is not honest.

(v) The square root of 16 is 4.

(vi) $x^2 - 5x + 6 = 0$.

(vii) $x^2 - 5x + 6 = 0$ when $x = 6$.

(viii) $x^2 - 5x + 6 = 0$ when $x = 2$.

(ix) 4 is a prime number.

(x) Come here !

2. Write the truth values of the following statements :

(i) $ax^2 + bx + c = 0$ may have non–real roots.

(ii) There are only finite number of integers.

(iii) The intersection of two non–empty sets is always non–empty.

(iv) The capital of America is New York.

(v) Two individuals may be relatives.

Answers

1. (i), (iii), (v), (vii), (viii), (ix)

2. (i) T (ii) F (iii) F (iv) T (v) T.

USE OF VENN–DIAGRAMS FOR FINDING TRUTH VALUES OF STATEMENTS

Students are familiar with Venn–diagrams. These diagrams are used very frequently in the problems of 'set theory'. Venn–diagrams can also be used for deciding the truthfulness of statements.

1. Represent the truth of each of the following statements by means of a Venn–diagram :

(i) Some teachers are scholars.

(ii) Some quadratic equations have two real roots.

(iii) All human beings are mortal and x is not a human being.

Sol.

(i) Let T = Set of all teachers and S = set of all scholars.

Since the given statement: 'some teachers are scholars' is true, we have $T \cap S \neq \phi$ and $T \cap S \subseteq S$.

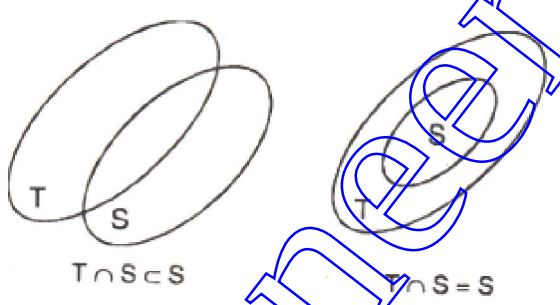

$\therefore$ Either $T \cap S \subset S$ or $T \cap S = S$.

The truth of the given statement is shown in the adjoining, Venn–diagrams :

(ii) Let Q = set of all quadratic equations and Q* = set of all quadratic equations having real

roots.

Since the given statement: 'some quadratic equations have two real roots is true, we have $Q^* \subset Q$.

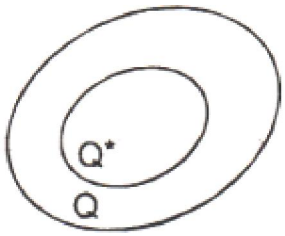

The truth of the given statement is shown in the adjoining Venn–diagram.

(iii) Let H = set of all human being

and M = set of all mortals.

Since the given statement: 'all human beings are mortal and x is, not a human being' is true, we have

(i) $H \subset M, x \in M - H$ or (ii) $H \subset M, x \notin M$

The truth of the given statement is shown in the following Venn–diagrams.

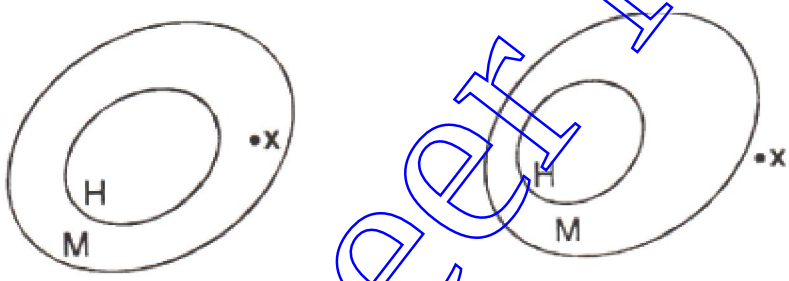

(*i*) $H \subset M, x \in M - H$ (*ii*) $H \subset M, x \notin M$

2. Find the truth value of the statement: 'Every hexagon is a polygon'. Justify your answer by using a Venn–diagram.

Sol.

We know that a polygon is a plane figure bounded by three or more sides.

$\therefore$ Every hexagon is also a polygon.

$\therefore$ The given statement is true and thus its truth value is 'T'.

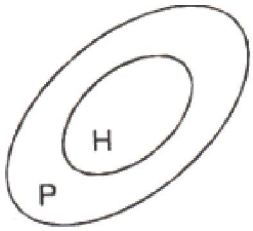

Let P: set of all polygons

and H: set of all hexagons.

$\therefore$ $H \subset P$. These sets are shown in the adjoining Venn–diagram.

3. By using a Venn–diagram, find the truth values of the following statements :

(i) Every triangle is a polygon.

(ii) Every polygon is a triangle.

(iii) There exists a polygon which is not a triangle.

(iv) There cannot be a triangle which is not a polygon.

Sol.

Let T and P be respectively the sets of all triangles and polygons.

$\therefore$ $T \subset P$

the sets T, P are shown in the Venn–diagram.

(i) Since $T \subset P$, every triangle is a polygon.

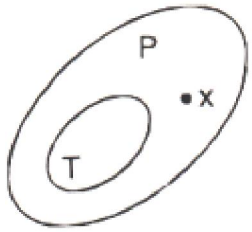

$\therefore$ The statement 'Every triangle is a polygon' is true and its truth value is T.

(ii) Since $T \subset P$, there exists an element x such that $x \notin T$ arid $x \in P$.

$\therefore$ Every polygon is not a triangle.

$\therefore$ The statement 'Every polygon is a triangle' is false and its truth value is F.

(iii) Since $T \subset P$, there exists an element x such that $x \notin T$ and $x \in P$.

$\therefore$ There exists a polygon, namely x, which is not a triangle.

$\therefore$ The statement 'there exists a polygon which is not a triangle' is true and its truth value is T.

(iv) Since $T \subset P$, each and every element of T is an element of P.

$\therefore$ There cannot be a triangle which is not a polygon.

$\therefore$ The statement 'there cannot be a triangle which is not a polygon' is true and its truth value is T.

4. Under the assumption: 'all teachers are honest', find, by using Venn–diagrams, whether the following sentences are statements or not ?

(i) A honest person need not be a teacher.

(ii) Every honest person is a teacher.

(iii) There are some honest persons who are not teachers.

Sol.

Let T = set of all teachers

and H = set of all honest persons.

The given assumption is : 'all teachers are honest'. $\therefore T \subseteq H$.

Two cases arises :

Case I. $T \subset H$

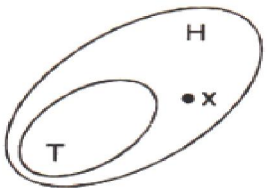

Case II. $T = H$

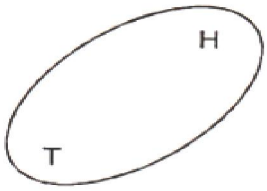

(i) the sentence is: 'a honest person need not be a teacher'.

In case I, the sentence is true, because there exists a honest person x who is not a teacher.

In case II, the sentence is true, because every honest person is a teacher.

$\therefore$ Given sentence is a statement.

(ii) The sentence is : 'every honest person is a teacher'.

In case I, the sentence is false, because x is a honest person and is not a teacher.

In case II, the sentence is true because we cannot find a honest person who is not a teacher.

$\therefore$ Given sentence is not a statement.

(iii) The sentence is : 'there are some honest persons who are not teachers'.

In case I, the sentence is true, because x is a honest person who is not a teacher.

In case II, the sentence is false, because, we cannot find a honest person who is not a teacher.

$\therefore$ Given sentence is not a statement.

WORKING RULES FOR SOLVING PROBLEMS

Rule I. In a Venn-diagram, universal set is shown by a rectangle.

Rule II. In a Venn-diagram, the subsets of universal set are shown by circles or ellipses.

1. Represent the truth of each of the following statements by means of Venn-diagrams :

(i) Some students are smokers.

(ii) Every rational number is a real number.

(iii) Every rational number is a real number and every real number is a complex number.

(iv) All teachers are scholars and all scholars are teachers.

(v) All natural numbers are real numbers and x is not a natural number.

Sol:

(i) A = set of all smokers

B = set of all students.

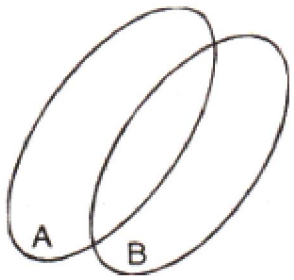

Or

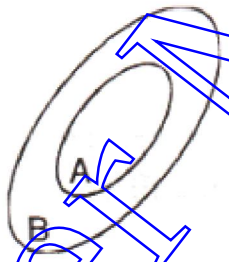

(ii) Q = set of all rational numbers.

R = set of all real numbers.

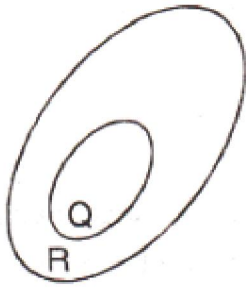

(iii) Q = set of all rational numbers.

R = set of all real numbers.

C = set of all complex numbers.

(iv) T = set of all teachers.

S = set of all scholars.

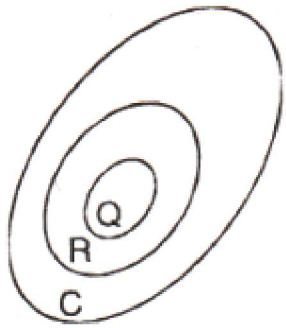

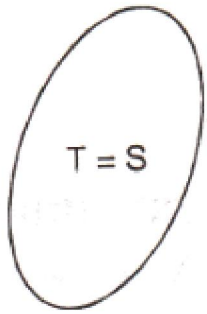

(v) N = set of all natural numbers.

R = set of all real numbers.

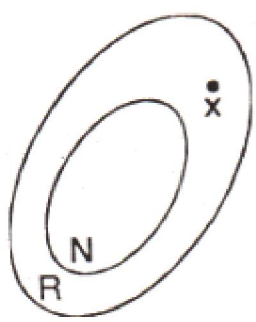

Or

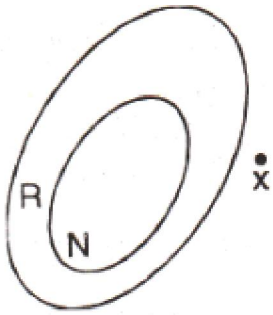

2. Find the truth value of the statement: 'Every square is a polygon'. Justify your answer by using a Venn–diagram.

Ans: T

3. Find the truth value of the statement : Every integer is a rational number'. Justify your answer by using a Venn–diagram.

Ans: T

4. By using Venn–diagrams, find the truth values of the following statements :

(i) Every female person is a human being.

(ii) Every human being is a female person.

(iii) There exist a human being who is not a female person.

(iv) There cannot be a female person who is not a human being.

Ans:

(i) T(ii) F (iii) T (iv) T

5. By using Venn–diagrams, find the truth values of the following statements :

(i) There exists a rational number which is not a complex number.

(ii) Every rational number is a complex number.

(iii) There cannot be a rational number which is not a complex number.

(iv) Every complex number is a rational number.

Ans:

(i) F(ii) T (iii) T (iv) F

6. Under the assumption: 'all wives are faithful', find by using Venn–diagrams, whether the following sentences are statements or not ?

(i) Every faithful person is a wife.

(ii) A faithful person need not be a wife.

(iii) There are some faithful persons who are not wives.

Ans:

(i) No (ii) Yes (iii) No.

TRUTH TABLE

A table indicating the truth values of one or more statements is called a truth table.

The truth tables for one statement 'p', two statements 'p, q' , three statements 'p, q, r' are shown below in figure (i), (ii), (iii) respectively :

p
T
F

(i)

p	q
T	T
T	F
F	T
F	F

(ii)

p	q	r
T	T	T
T	T	F
T	F	T
F	T	T
T	F	F
F	T	F
F	F	T
F	F	F

(iii)

In case of n statements, there are 2^n distinct possible arrangements of truth values of the statements.The second row of figure (ii) represent the case when p is true and q is false. Similarly, the fourth row of figure (iii) represent the case when p is false, q is true and r is true.

NEGATION OPERATION

If p is any statement, then the denial of statement p is called the **negation** of statement p and is written as ~ p.The negation of statement p is formed by inserting the word 'not' in p or by writing 'It is false that .....' before p.

Illustrations, (i) Let p be the statement: 4 is a factor of 12.

∴ ~ p can be written as : '4 is not a factor of 12' or as 'it is false that 4 is a factor of 12. Here truth value of p is T and that of ~ p is F.

(ii) Let q be the statement: 'Jaipur is in Bangla Desh'.

∴ ~ q Can be written as : 'Jaipur is not in Bangla Desh' or as 'it is false that Jaipur is in Bangla Desh'.

Here truth value of q is F and that of ~ q is T.

The truth value of negation of a statement is always opposite to the truth value of the original statement.

p	$\sim p$
T	F
F	T

Let p be any statement. The truth values of p and ~p can also be shown in the form of actable, called truth table. In the truth table, the first line states that if p is true then ~p is false and the second line states that if p is false then ~ p is true.

1. Write the negation of the following statements :

(i) $3 + 7 = 10$ (ii) $8 \leq 15$

(iii) All doctors are men (iv) Shimla is in H.P.

Sol.

(i) $3 + 7 \neq 10$.

(ii) $8 > 15$.

(iii) All doctors are not men.

(iv) Shimla is not in H.P.

2. Find the truth values of the statement ~ p if the statement p is :

(i) $\log_a mn = \log_a m - \log_a n$ (ii) $(3 + 9) - 7 = 4$

(iii) $2^{(3^2)} \neq (2^3)^2$ (iv) 7.3 is an irrational number.

Sol.

(i) We have p : $\log_a mn = \log_a m - \log_a n$.

$\therefore$ ~ p is $\log_a mn \neq \log_a m - \log_a n$.

Since $\log_a mn = \log_a m + \log_a n$, truth value of ~ p is T.

Remark. It would be wrong to write ~ p as $\log_a mn = \log_a m + \log_a n$.

(ii) we have p: $(3 + 9) - 7 = 4$.

$\therefore$ ~p is $(3 + 9) - 7 \neq 4$

Since $(3 + 9) - 7 = 12 - 7 = 5$ and $5 \neq 4$, the truth value of ~ p is T.

(iii) We have p : $2^{(3^2)} \neq (2^3)^2$

$\therefore$ ~ p is $2^{(3^2)} = (2^3)^2$

Since $2^{(3)^2} = 2^9 = 512$ and $(2^3)^2 = (8)^2 = 64$ and $512 \neq 64$, the truth value of ~ p is F.

(iv) We have p : 7.3 is an irrational number.

$\therefore$ ~ p is 7.3 is not an irrational number.

Since $7.3 \in Q$, the truth value of ~ p is T.

BASIC LOGICAL CONNECTIVES

A statement whose truth value does not explicitly depend on another statement is called a simple statement.

For example, 'the cube of 4 is 64' is a simple statement.If two or more simple statements are combined by the use of words as : 'and', 'or', 'if ……. then', 'if and only if', then the resulting statement is called a compound statement. Simple statements which on combining form a compound statement are called component state ments of the compound statement under consideration. The compound statement S consisting of component statements p, q, r, …….. is

written as S(p, q, r,.....).

Remark. A simple statement is not a combination of two or more statements, whereas a compound statement is a combination of two or more simple statements.

Illustrations,

(i) Ram is healthy and he has blue eyes.

(ii) Mohan is in class XI or 4 is a factor of 8.

(iii) If Bombay is in India then 3 + 7 = 12.

(iv) Bombay is in India if and only if 3 + 7 = 12.

The truth values of above compound statements would depend upon the truth values of the constituent statements.The word 'and', 'or', 'if ..... then ', 'if and only if are called basic logical connectives and are denoted by the symbols $\wedge, \vee, \rightarrow, \leftrightarrow$ respectively. The compound statements obtained by using basic logical connectives $\wedge, \vee, \rightarrow, \leftrightarrow$ are called conjunction, disjunction, conditional statement, bi-conditional statement respectively. This can be shown in tabular form given below:

Basic logical connective	*Symbol*	*Compound statement*
AND	$\wedge$	Conjunction
OR	$\vee$	Disjunction
IF..... THEN	$\rightarrow$	Conditional statement
IF AND ONLY IF	$\leftrightarrow$	Biconditional statement

Now we shall study each basic logical connective in detail.

CONJUNCTION

If two statements are combined by using the logical connective 'and ', then the resulting statement is called a conjunction**.** The conjunction of statements p and q is denoted by $p \wedge q$.

For example, let

p: Monsoon is very good this year

and q: The rivers are rising, then their conjunction $p \wedge q$ denotes the statement: 'Monsoon is very good this year and the rivers are rising.

The conjunction $p \wedge q$ is defined to be true when p and q are both true, otherwise it is false.

p	q	$p \wedge q$
T	T	T
T	F	F
F	T	F
F	F	F

The adjoining truth table represents the truth values of the conjunction $p \wedge q$. In the truth table, the first line say that if p is true, q is true then $p \wedge q$ is true. The other lines have analogous meaning.

3. Let p and q stand for, the statements : 'Nitin is intelligent' and 'Nitin is hardworking' respectively. Describe the following statements:

(i) $p \wedge q$, (ii) $\sim p \wedge q$, (iii) $p \wedge \sim q$, (iv) $\sim p \wedge \sim q$.

Sol.

We have p: Nitin is intelligent

and q: Nitin is hardworking,

(i) $p \wedge q$: Nitin is intelligent and Nitin is hardworking.

(ii) $\sim p \wedge q$: Nitin is not intelligent and Nitin is hardworking.

(iii) $p \wedge \sim q$: Nitin is intelligent and Nitin is not hardworking.

(iv) $\sim p \wedge \sim q$: Nitin is not intelligent and Nitin is not hardworking.

4. Find the truth values of the following statements.

(i) 2 divides 4 and3 + 7 = 10 (ii) 2 divides 7and 8 + 10 = 18

(iii) 7 divides 14 and 8 + 2=12 (iv) 3 divides 16 and 2 + 5 = 8.

Sol.

We know that the conjunction $p \wedge q$ of p and q is true only when. p and q are both true.

(i) Truth value of '2 divides 4' is T.

Truth value of 3 + 7 = 10 is T.

$\therefore$ Truth value of '2 divides 4 and 3 + 7 = 10' is T.

(ii) Truth value of '2 divides 7' is F.

Truth value of '8 + 10 = 18 ' is T.

$\therefore$ Truth value of '2 divides 7 and 8 + 10 =18' is F.

(iii) Truth value of '7 divides 14' is T.

Truth value of '8 + 2 = 12' is F.

$\therefore$ Truth value of '7 divides 14 and 8 + 2 = 12' is F.

(iv) Truth value of '3 divides 16' is F.

Truth value of '2 + 5 = 8' is F.

$\therefore$ Truth value of '3 divides 16 and 2 + 5 = 8' is F.

5. Find the truth values of :

(i) $\sim P \wedge q$ (ii) $\sim (p \wedge q)$.

Sol.

(i) **Truth values of $\sim p \wedge q$**

p	q	$\sim p$	$\sim p \wedge q$
T	T	F	F
T	F	F	F
F	T	T	T
F	F	T	F

(ii) **Truth values of $\sim (p \wedge q)$**

p	q	$p \wedge q$	$\sim (p \wedge q)$
T	T	T	F
T	F	F	T
F	T	F	T
F	F	F	T

DISJUNCTION

If two statements are combined by using the logical connective 'or', then the resulting statement is called a **disjunction.**

The disjunction of two statements p and q is denoted by $p \vee q$. For example, let p: $8 \leq 10$ and q : 4 is an integer, then their disjunction $p \vee q$ denotes the statement: '$8 \leq 10$ or 4 is an integer'.

The disjunction $p \vee q$ is defined to be true if at least one of p and q is true. The adjoining

truth table represents the truth values of the disjunction $p \vee q$ otherwise it is false. In the truth table, the first line says that if p is true, q is true then $p \vee q$ is true. The other lines have analogous meaning.

p	q	$p \vee q$
T	T	T
T	F	T
F	T	T
F	F	F

Remark. The disjunction $p \vee q$ is false only when p and q are both false.

6. Let p and q stand for the statements 'Kamla is tall' and 'Bimla is beautiful' respectively. Describe the following statements :

(i) $p \vee q$ (ii) $\sim p \vee q$ (iii) $p \vee \sim p$ (iv) $\sim p \vee \sim q$.

Sol.

We have p : Kamla is tall

and q : Bimla is beautiful.

(i) $p \vee q$: Kamla is tall or Bimla is beautiful.

(ii) $\sim p \vee q$: Kamla is not tall or Bimla is beautiful.

(iii) $p \vee \sim q$: Kamla is tall or Bimla is not beautiful.

(iv) $\sim p \vee \sim q$: Kamla is not tall or Bimla is not beautiful.

7. Find the truth values of:

(i) $\sim p \vee q$ (ii) $\sim (p \vee q)$.

Sol.

(i) **Truth values of ~ p ∨ q**

p	q	$\sim p$	$\sim p \vee q$
T	T	F	T
T	F	F	F
F	T	T	T
F	F	T	T

(ii) **Truth values of ~ (p ∨ q)**

p	q	$p \vee q$	$\sim (p \vee q)$
T	T	T	F
T	F	F	T
F	T	F	T
F	F	F	T

8. Let p and q stand for the statements: 'It is hot' and 'It is humid' respectively. Describe 'the following statements :

(i) ~ p, (ii) ~ q, (iii) $p \wedge q$, (iv) $p \vee q$, (v) $\sim p \wedge q$, (vi) $p \vee \sim q$ (vii) $\sim p \vee \sim q$, (viii) $\sim p \wedge \sim q$.

Sol.

We have p : It is hot

and q : It is humid.

(i) ~ p : It is not hot or It is false that it is hot.

(ii) ~ q : It is not humid.

(iii) $p \wedge q$: It is hot and humid.

(iv) $p \vee q$: It is hot or it is humid.

(v) $\sim p \wedge q$: It is not hot and it is humid.

(vi) $p \vee \sim q$: It is hot or it is not humid.

(vii) $\sim p \vee \sim q$: It is not hot or it is not humid.

(viii) $\sim p \wedge \sim q$: It is not hot and it is not humid.

9. Find the truth values of the following compound statements :

(i) Honesty is best policy or $3 < 7$ (ii) Honesty is best policy or $4 > 7$

(iii) Honesty is worst policy or $5 \geq 3$ (iv) Honesty is worst policy or $11 < 9$.

Sol.

We know that the disjunction $p \vee q$ of p and q is true only when at least one of p and q is true.

(i) Truth value of 'Honesty is best policy' is T.

Truth value of '$3 < 7$' is T.

$\therefore$ Truth value of 'Honesty is best policy or $3 < 7$' is T.

(ii) Truth value of 'Honesty is best policy' is T.

Truth value of '$4 > 7$' is F.

$\therefore$ Truth value of 'Honesty is best policy or $4 > 7$' is T.

(iii) Truth value of 'Honesty is worst policy' is F.

Truth value of '$5 \geq 3$' is T.

$\therefore$ Truth value of 'Honesty is worst policy or $5 \geq 3$' is T.

(iv) Truth value of 'Honesty is worst policy' is F.

Truth value of '$11 < 9$' is F.

$\therefore$ Truth value of 'Honesty is worst policy or $11 < 9$' is F.

10. Find the truth values of the following compound statements ;

(i) $4 + 2 = 6$ and $9 + 7 = 15$

(ii) 3 divides 9 and Ch. of log 273.5 is 2

(iii) $5 + 3 = 2$ or $5 \times 3 = 15$

(iv) 4 divides 17 or $3 + 4 = 7$.

Sol.

(i) Truth value of '$4 + 2 = 6$' is T.

Truth value of '$9 + 7 = 15$' is F.

$\therefore$ Truth value of '$4 + 2 = 6$ and $9 + 7 = 15$' is F.

(ii) Truth value of '3 divides 9' is T.

Truth value of 'Ch. of log 273.5 is 2' is T.

$\therefore$ Truth value of '3 divides 9 and Ch. of log 273.5 is 2' is T.

(iii) Truth value of '$5 + 3 = 2$' is F.

Truth value of '$5 \times 3 = 15$' is T.

$\therefore$ Truth value of '$5 + 3 = 2$ or $5 \times 3 = 15$' is T.

(iv) Truth value of '4 divides 17' is F.

Truth value of '$3+4 = 7$' is T

$\therefore$ Truth value of '4 divides 17 or $3 + 4 = 7$' is T.

11. Find the truth values of :

(i) $\sim (p \vee \sim q)$

(ii) $\sim(\sim p \wedge \sim q)$.

Sol.

(i) **Truth values of $\sim(p \vee \sim q)$**

p	q	$\sim q$	$p \vee \sim q$	$\sim(p \vee \sim q)$
T	T	F	T	F
T	F	T	T	F
F	T	F	F	T
F	F	T	T	F

(ii) **Truth values of $\sim(\sim p \wedge \sim q)$**

p	q	$\sim p$	$\sim q$	$\sim p \wedge \sim q$	$\sim(\sim p \wedge \sim q)$
T	T	F	F	F	T
T	F	F	T	F	T
F	T	T	F	F	T
F	F	T	T	T	F

12. Write down the truth table for the compound statement : $(\sim p \vee q) \wedge (\sim p \wedge \sim q)$.

Sol:

Truth table for $(\sim p \vee q) \wedge (\sim p \wedge \sim q)$

p	q	$\sim p$	$\sim q$	$\sim p \vee q$	$\sim p \wedge \sim q$	$(\sim p \vee q) \wedge (\sim p \wedge \sim q)$
T	T	F	F	T	F	F
T	F	F	T	F	F	F
F	T	T	F	T	F	F
F	F	T	T	T	T	T

13. Find the truth values of the following compound statements :

(i) $(p \vee \sim r) \wedge (q \vee \sim r)$ (ii) $\sim(p \vee \sim q) \wedge (\sim p \vee r)$.

Sol.

(i) **Truth values of $(p \vee \sim r) \wedge (q \vee \sim r)$**

p	q	r	$\sim r$	$p \vee \sim r$	$q \vee \sim r$	$(p \vee \sim r) \wedge (q \vee \sim r)$
T	T	T	F	T	T	T
T	T	F	T	T	T	T
T	F	T	F	T	F	F
F	T	T	F	F	T	F
T	F	F	T	T	T	T
F	T	F	T	T	T	T
F	F	T	F	F	F	F
F	F	F	T	T	T	T

(ii) **Truth values of $\sim (p \vee \sim q) \wedge (\sim p \vee r)$**

p	q	r	$\sim p$	$\sim q$	$p \vee \sim q$	$\sim(p \vee \sim q)$	$\sim p \vee r$	$\sim (p \vee \sim q) \wedge (\sim p \vee r)$
T	T	T	F	F	F	T	T	T
T	T	F	F	F	T	F	F	F
T	F	T	F	T	T	F	T	F
F	T	T	T	F	F	T	T	T
T	F	F	F	T	T	F	F	F
F	T	F	T	F	F	T	T	T
F	F	T	T	T	T	F	T	F
F	F	F	T	T	T	F	T	F

WORKING RULES FOR SOLVING PROBLEMS

Rule I. A truth table indicates the truth Values of a number of statements and their compound statements in a compact form.

Rule II. If there are n statements, then there are 2^n rows in the truth table.

Rule III. The negation $\sim p$ of the statement p is the denial of p.

Rule IV. The conjunction of statements p and q is denoted by $p \wedge q$ and is true only when p and q are both true.

Rule V. The disjunction of statements p and q is denoted by $p \vee q$ and is true if atleast one of p and q is true.

Exercise

1. Write the negation of the following statements:

(i) The square of 4 is 16. (ii) 14 divide 27.

(iii) Chandigarh is in Gujarat. (iv) 7 > 3.

(v) Product of 3 and 4 is 22.

Ans:

(i) The square of 4 is not 16. (ii) 14 does not divide 27.

(iii) Chandigarh is not in Gujarat. (iv) $7 \leq 3$.

(v) Product of 3 and 4 is not 22

2. Find the truth value of the statement ~ p if the statement p is :

(i) $5 + 7 = 12$ (ii) $\log_2 8 = 4$

(iii) $3 \times 4 = 14$ (iv) $7-3=4$.

Ans:

(i) F (ii) T (iii) T (iv) F

3. Find the truth values of the statement ~ p if the statement p is :

(i) For complex numbers z_1 and z_2, $|z_1 z_2| = |z_1|\,|z_2|$

(ii) Real part of $(1+ 2i)^3$ is 4

(iii) $\tan(-315°) = 1$

(iv) $\sec^2 45° + \text{cosec}^2 45° = 2$.

Ans:

(i) F (ii) T (iii) F (iv) T

4. Let p and q stand for the statements : 'Lucknow is in U.P.' and '4 divides 12' respectively.

Describe the following statements:

(i) $p \wedge q$ (ii) $p \vee q$ (iii) $\sim p \wedge q$ (iv) $\sim p \vee q$ (v) $p \wedge \sim q$ (vi) $p \vee \sim q$ (vii) $\sim p \wedge \sim q$

(viii) $\sim p \vee \sim q$.

Ans:

(i) Lucknow is in U.P. and 4 divides 12.

(ii) Lucknow is in U.P. or 4 divides 12.

(iii) Lucknow is not in U.P. and 4 divides 12.

(iv) Lucknow is not in U.P. or 4 divides 12.

(v) Lucknow is in U.P. and 4 does not divide 12.

(vi) Lucknow is in U.P. or 4 does not divide 12.

(vii) Lucknow is not in U.P. and 4 does not divide 12.

(viii) Lucknow is not in U.P. or 4 does not divide 12.

5. Let p and q stand for the statements : '2 + 3 = 5' and '3 + 7 = 8' respectively. Describe the following statements:

(i) $p \wedge q$ (ii) $\sim p \wedge q$ (iii) $p \wedge \sim q$ (iv) $\sim p \wedge \sim q$

(v) $p \vee q$ (vi) $\sim p \vee q$ (vii) $p \vee \sim q$ (viii) $\sim p \vee \sim q$.

Ans:

(i) 2 + 3 = 5 and 3 + 7 = 8 (ii) 2 + 3 ≠ 5 and 3+7 = 8

(iii) 2 + 3 =5 and 3 + 7 ≠ 8 (iv) 2 + 3 ≠ 5 and 3 + 7 ≠ 8

(v) 2 + 3 = 5 or 3+7 = 8 (vi) 2 + 3 ≠ 5 or 3+7 = 8

(vii) 2 + 3 ≠ 5 or 3 + 7 ≠ 8 (viii) 2 + 3 ≠ 5 or 3 + 7 ≠ 8.

6. If p be any statement, then write the truth tables of the statements :

(i) $\sim\sim p$ (ii) $\sim\sim\sim p$.

Ans:

p	$\sim p$	(i)	(ii)
T	F	T	F
F	T	F	T

7. If p and q be any statements, then write the truth tables of the following compound statements :

(i) $p \wedge \sim q$ (ii) $\sim p \wedge \sim q$.

Ans:

p	q	(i)	(ii)
T	T	F	F
T	F	T	F
F	T	F	F
F	F	F	T

8. If p and q be any statements, then write the truth tables of the following compound statements :

(i) $p \vee \sim q$ (ii) $\sim p \vee \sim q$.

Ans:

p	q	(i)	(ii)
T	T	T	F
T	F	T	T
F	T	F	T
F	F	T	T

9. Find the truth values of the following compound statements :

(i) $2 + 4 = 6 \wedge 2 \times 3 = 6$

(ii) It is false that $2 + 5 = 8 \wedge 2 \times 5 = 20$

(iii) It is false that $5 - 2 = 3 \wedge 4 \times 3 = 12$

(iv) $2 + 5 = 25 \wedge$ It is false that $5 + 3 = 8$.

Ans:

(i) T (ii) F (iii) F (iv) F

10. Find the truth values of the following compound statements :

(i) Real part of $(4 + i)^2 = 15 \vee$ Roots of $x^2 - 5x + 6 = 0$ are 2, 3

(ii) $\cot(-135°) = 1 \vee \sec 450° = \frac{1}{2}$

(iii) It is false that $\sin^2\theta + \cos^2\theta = 1 \vee \sec^2\theta - \tan^2\theta = 1$

(iv) $(2^2)^4 = 64 \vee \log_{625} 25 = 2$.

Ans:

(i) T (ii) T (iii) T (iv) F

11. Find the truth values of the following compound statements :

(i) $\sim(p \wedge \sim q)$ (ii) $\sim(\sim p \wedge \sim q)$.

Ans:

p	q	(i)	(ii)
T	T	T	T
T	F	F	F
F	T	T	F
F	F	T	F

12. Find the truth values of the following compound statements :

(i) $(p \wedge q) \vee \sim(p \vee q)$ (ii) $(\sim p \vee q) \wedge (\sim p \wedge \sim q)$.

Ans:

p	q	(i)	(ii)
T	T	T	F
T	F	F	F
F	T	F	F
F	F	T	T

13. Find the truth values of the following compound statements :

(i) $p \wedge (q \wedge r)$ (ii) $(p \vee q) \vee r$ (iii) $p \wedge (q \vee r)$ (iv) $(p \wedge q) \vee r$.

Ans

p	q	r	(i)	(ii)	(iii)	(iv)
T	T	T	T	T	T	T
T	T	F	F	T	T	T
T	F	T	F	T	T	T
F	T	T	F	T	F	T
T	F	F	F	T	F	F
F	T	F	F	T	F	F
F	F	T	F	T	F	T
F	F	F	F	F	F	F

14. Find the truth values of the following compound statements :

(i) $(p \wedge \sim q) \vee r$ (ii) $\sim p \vee (q \wedge \sim r)$ (iii) $(\sim p \wedge \sim g) \vee \sim r$ (iv) $\sim ((p \wedge q) \vee \sim r)$.

Ans

p	q	r	(i)	(ii)	(iii)	(iv)
T	T	T	T	F	F	F
T	T	F	F	T	T	F
T	F	T	T	F	F	T
F	T	T	T	T	F	T
T	F	F	T	F	T	F
F	T	F	F	T	T	F
F	F	T	T	T	T	T
F	F	F	F	T	T	F

CONDITIONAL STATEMENT

If two statements are combined by using the logical connective 'if ..... then', then the resulting statement is called a conditional statement.

The conditional statement of two statements p and q (in this order) is denoted by $p \longrightarrow q$.

For example,

let p : 2 + 5 = 7 and q : 9 is an integer, then their conditional statement $p \longrightarrow q$ denotes the statement: 'If 2 + 5 = 7, then 9 is an integer'.

p	q	$p \rightarrow q$
T	T	T
T	F	F
F	T	T
F	F	T

The conditional statement $p \longrightarrow q$ is defined to be true except in case p is true and q is false.

The adjoining truth table represents the truth values of the conditional statement $p \longrightarrow q$.

Remark. The truth values of the conditional statement $q \longrightarrow p$ are not same as that of $p \longrightarrow q$.

1. Example 1. Let p and q stand for the statements ' Bhopal is in M.P.' and '3 + 4 = 7' respectively. Describe the following conditional statements :

(i) $P \longrightarrow q$ (ii) $\sim P \longrightarrow q$

(iii) $p \longrightarrow \sim q$ (iv) $\sim p \longrightarrow \sim q$.

Sol.

We have p : Bhopal is in M.P.

and q: 3 + 4 = 7.

(i) $p \longrightarrow q$: If Bhopal is in M.P. then 3 + 4 = 7.

(ii) ~p ⟶ q: lf Bhopal is not in M.P. then 3 + 4 = 7.

(iii) p ⟶ ~q: If Bhopal is in M.P. then 3 + 4 ≠ 7.

(iv) ~p ⟶ ~q: If Bhopal is not in M.P. then 3 + 4 ≠ 7.

2. Find the truth values of :

(i) ~p ⟶ q (ii) ~ (p ⟶ q).

Sol.

(i) **Truth values of ~ p → q**

p	q	$\sim p$	$\sim p \to q$
T	T	F	T
T	F	F	T
F	T	T	T
F	F	T	F

(ii) **Truth values of ~ (p → q)**

p	q	$p \to q$	$\sim (p \to q)$
T	T	T	F
T	F	F	T
F	T	T	F
F	F	T	F

3. Let p and q stand for the statements '3 divides 15' and '5 – 1 = 4' respectively.Describe the following conditional statements :

(i) p → q (ii) q → p (iii) p → ~q

(iv) q →~p (v) ~ p → ~q (vi) ~ q → ~p.

Sol.

We have p : 3 divides 15

and q: 5 – 1 = 4.

(i) p → q : If 3 divide 15 then 5 – 1 =4.

(ii) q → p: If 5 – 1 = 4 then 3 divide 15.

(iii) $p \to \sim q$: If 3 divide 15 then $5 - 1 \neq 4$.

(iv) $q \to \sim p$: If $5 - 1 = 4$ then 3 does not divide 15.

(v) $\sim p \to \sim q$: If 3 does not divide 15 then $5 - 1 \neq 4$.

(vi) $\sim q \to \sim p$: If $5 - 1 \neq 4$ then 3 does not divide 15.

4. Let p and q stand for the statements 'God is great' and 'work is worship' respectively.

Find the truth values of the following conditional statements:

(i) $p \to q$ (ii) $p \to \sim q$ (iii) $q \to \sim p$

(iv) $\sim p \to q$ (v) $\sim q \to p$ (vi) $\sim p \to \sim q$.

Sol.

We have p : God is great

and q : Work is workship.

$\therefore$ p and q are both true.

$\therefore$ $\sim p$ and $\sim q$ are both false.

(i) The truth value of $p \to q$ is T. ($\because$ p is true, q is true)

(ii) The truth value of $p \to \sim q$ is F. ($\because$ p is true, $\sim q$ is false)

(iii) The truth value of $q \to \sim p$ is F. ($\because$ q is true, $\sim p$ is false)

(iv) The truth value of $\sim p \to q$ is T. ($\because$ $\sim p$ is false, q is true)

(v) The truth value of $\sim q \to p$ is T. ($\because$ $\sim q$ is false, p is true)

(vi) The truth value of $\sim p \to \sim q$ is T. ($\because$ $\sim p$ is false, $\sim q$ is false)

5. Find the truth values of :

(i) $\sim p \to (q \to p)$ (ii) $(p \to q) \to (p \wedge q)$.

Sol.

(i) **Truth values of $\sim p \to (q \to p)$**

p	q	$\sim p$	$q \to p$	$\sim p \to (q \to p)$
T	T	F	T	T
T	F	F	T	T
F	T	T	F	F
F	F	T	T	T

(ii) **Truth values of $(p \to q) \to (p \wedge q)$**

p	q	$p \to q$	$p \wedge q$	$(p \to q) \to (p \wedge q)$
T	T	T	T	T
T	F	F	F	T
F	T	T	F	F
F	F	T	F	F

BICONDITIONAL STATEMENT

If two statements are combined by using the logical connective 'if and only if', then the resulting statement is called a **biconditional statement**.

The conditional statement of two statement p and q is denoted by $p \leftrightarrow q$.

For example, let p : 2 divides 4 and q : 5 divides 15, then biconditional statement $p \leftrightarrow q$ denotes the statement : '2 divides 4 if and only if 5 divides 15'.

p	q	$p \leftrightarrow q$
T	T	T
T	F	F
F	T	F
F	F	T

The biconditional statement $p \leftrightarrow q$ is defined to be true only when p and q have same truth value. The adjoining truth table represents the truth values of the biconditional statement $p \leftrightarrow q$.

Remark . The biconditional statement $p \leftrightarrow q$ is false only when p and q have opposite truth values.

6. Let p and q stand for the statements 'Meena speaks Hindi' and 'Heena speaks English' respectively. Describe the following biconditional statements :

(i) $p \leftrightarrow q$, (ii) $q \leftrightarrow p$, (iii) $p \leftrightarrow \sim q$,
(iv) $\sim p \leftrightarrow q$, (v) $\sim q \leftrightarrow \sim p$.

Sol :

We have p : Meena speaks Hindi.
and q : Heena speaks English.

(i) $p \leftrightarrow q$: Meena speaks Hindi if and only if Heena speaks English.

(ii) $q \leftrightarrow p$: Heena speaks English if and only if Meena speaks Hindi.

(iii) $p \leftrightarrow \sim p$: Meena speak Hindi if and only if Heena does not speak English.

(iv) $\sim p \leftrightarrow q$: Meena does not speak Hindi if and only if Heena speaks English.

(v) $\sim q \leftrightarrow \sim p$: Heena does not speak English if and only if Meena does not speak Hindi.

7. Find the truth values of :

(i) $\sim p \leftrightarrow q$ (ii) $\sim(p \leftrightarrow q)$.

Sol : (i)

Truth values of $\sim p \leftrightarrow q$

p	q	$\sim p$	$\sim p \leftrightarrow q$
T	T	F	F
T	F	F	T
F	T	T	T
F	F	T	F

(ii)

p	q	$p \leftrightarrow q$	$\sim (p \leftrightarrow q)$
T	T	T	F
T	F	F	T
F	T	F	T
F	F	T	F

8. Let p and q stand for the statement '$2 \times 4 = 8$' and ' 4 divides 7' respectively. Find the truth values of the following biconditional statements :

(i) $p \leftrightarrow q$ (ii) $\sim p \leftrightarrow q$
(iii) $\sim q \leftrightarrow p$ (iv) $\sim p \leftrightarrow \sim q$.

Sol :

We have p : $2 \times 4 = 8$
and q : 4 divides 7.

$\therefore$ p is true and q is false

$\therefore$ $\sim$ p is false and $\sim$ q is true.

(i) The truth value of $p \leftrightarrow q$ is F. ($\because$ p is true, q is false)

(ii) The truth value of $\sim p \leftrightarrow q$ is T. ($\because$ $\sim$ p is false, q is false)

(iii) The truth value of $\sim q \leftrightarrow p$ is T. ($\because$ $\sim q$ is true, p is true)

(iv) The truth value of ! $p \leftrightarrow \sim q$ is F. ($\because$ $\sim p$ is false, $\sim q$ is true)

9. Find the truth values of :

(i) $(p \leftrightarrow \sim q) \leftrightarrow (q \rightarrow p)$ (ii) $(p \rightarrow q) \vee \sim (p \leftrightarrow \sim q)$.

Sol : (i)

Truth values of $(p \leftrightarrow \sim q) \leftrightarrow (q \rightarrow p)$

p	q	$\sim q$	$p \leftrightarrow \sim q$	$q \rightarrow p$	$(p \leftrightarrow \sim q) \leftrightarrow (q \rightarrow p)$
T	T	F	F	T	F
T	F	T	T	T	T
F	T	F	T	F	F
F	F	T	F	T	F

(ii) **Truth values of** $(p \rightarrow q) \vee \sim (p \leftrightarrow \sim q)$

p	q	$\sim q$	$p \rightarrow q$	$p \leftrightarrow \sim q$	$\sim (p \leftrightarrow \sim q)$	$(p \rightarrow q) \vee \sim (p \leftrightarrow \sim q)$
T	T	F	T	F	T	T
T	F	T	F	T	F	F
F	T	F	T	T	F	T
F	F	T	T	F	T	T

10. Find the truth values of the compound statement $(p \rightarrow q) \rightarrow [(q \rightarrow r) \rightarrow (p \rightarrow q)]$.

Sol :

p	q	r	$p \rightarrow q$	$q \rightarrow r$	$(q \rightarrow r) \rightarrow (p \rightarrow q)$	$(p \rightarrow q) \rightarrow [(q \rightarrow r) \rightarrow (p \rightarrow q)]$
T	T	T	T	T	T	T
T	T	F	T	F	T	T
T	F	T	F	T	F	T
F	T	T	T	T	T	T
T	F	F	F	T	F	T
F	T	F	T	F	T	T
F	F	T	T	T	T	T
F	F	F	T	T	T	T

WORKING RULES FOR SOLVING PROBLEMS

Rule I. The conditional statements of statement p and q (in this order) is denoted of $p \rightarrow q$ and is true except when p is true and q is false.

Rule II. The biconditional statement of statements p and q is denoted by $p \leftrightarrow q$ and is true only when p and q have same truth values.

Exercise

1. If statement p and q are respectively : '4 + 5 = 9' and '2 + 3 = 5' then write the conditional statements :

(i) $p \rightarrow q$ (ii) $p \rightarrow \sim q$ (iii) $\sim p \rightarrow q$ (iv) $\sim p \rightarrow \sim p$.

Ans:

(i) If '4 + 5 = 9' then '2 + 3 = 5' (ii) If '4 + 5 = 9' then '2 + 3 ≠ 5'

(iii) If '4 + 5 ≠ 9' then '2 + 3 = 5' (iv) If '2 + 3 ≠ 5' then '4 + 5 ≠ 9'.

2. If statements p and q are respectively : '3 < 4' and '7 > 5' then write the biconditional statements :

(i) $p \leftrightarrow q$ (ii) $\sim p \leftrightarrow q$ (iii) $p \leftrightarrow \sim q$ (iv) $\sim p \leftrightarrow \sim q$.

Ans:

(*i*) '3 < 4' if and only if '7 > 5'
(*ii*) '3 ≥ 4' if and only if '7 > 5'
(*iii*) '3 < 4' if and only if '7 ≤ 5'
(*iv*) '3 ≥ 4' if and only if '7 ≤ 5'.

3. If truth values of statements p and q are T and T respectively then write the truth values of :

(i) $p \rightarrow q$ (ii) $p \rightarrow \sim q$ (iii) $\sim(p \leftrightarrow \sim q)$ (iv) $\sim p \leftrightarrow \sim q$.

Ans:

(i) T (ii) F (iii) T (iv) T

4. If truth values of statements p and q are T and F respectively then write the truth values of :

(i) $p \rightarrow q$ (ii) $p \rightarrow \sim q$ (iii) $\sim p \leftrightarrow q$ (iv) $\sim(\sim p \leftrightarrow \sim q)$.

Ans: (i) F (ii) T (iii) T (iv) T

5. If p and q stand for the statement : '0 is a natural number' and '5 divides 10' respectively then find the truth values of the following compound statements :

(i) $p \rightarrow \sim q$ (ii) $\sim p \rightarrow q$ (iii) $\sim p \rightarrow \sim p$ (iv) $\sim q \rightarrow \sim p$

(v) $p \leftrightarrow q$ (vi) $\sim p \leftrightarrow q$ (vii) $p \leftrightarrow \sim q$ (viii) $\sim p \leftrightarrow \sim q$.

Ans:

(i) T (ii) T (iii) F (iv) T (v) F (vi) T (vii) T (viii) F

6. Find the truth values of the following compound statements :

(i) $p \leftrightarrow \sim q$ (ii) $\sim p \rightarrow q$.

Ans:

p	q	(i)	(ii)
T	T	F	T
T	F	T	T
F	T	T	T
F	F	T	F

7. Find the truth values of the following compound statements :

(i) $\sim p \leftrightarrow q$ (ii) $\sim p \leftrightarrow \sim q$.

Ans:

p	q	(i)	(ii)
T	T	F	T
T	F	T	F
F	T	T	F
F	F	F	T

8. Find the truth values of the following compound statements :

(i) $(p \wedge q) \rightarrow \sim p$ (ii) $(p \wedge q) \rightarrow (p \vee q)$.

Ans:

p	q	(i)	(ii)
T	T	F	T
T	F	T	T
F	T	T	T
F	F	T	T

9. Find the truth values of the compound statement : $(p \rightarrow q) \leftrightarrow (\sim q \rightarrow \sim p)$.

Ans:

p	q	$(p \rightarrow q) \leftrightarrow (\sim q \rightarrow \sim p)$
T	T	T
T	F	T
F	T	T
F	F	T

10. Find the truth values of the compound statement : $l \wedge m$ where $l = \sim q \rightarrow \sim r$. $m = \sim r \rightarrow \sim q$.

Ans:

q	r	$l \wedge m$
T	T	T
T	F	F
F	T	F
F	F	T

11. Find the truth values of the compound statement : $(p \rightarrow q) \rightarrow r$.

Ans:

p	q	r	$(p \rightarrow q) \rightarrow r$
T	T	T	T
T	T	F	F
T	F	T	T
F	T	T	T
T	F	F	T
F	T	F	F
F	F	T	T
F	F	F	F

12. Find the truth values of the compound statement : $(p \vee q) \leftrightarrow r$.

Ans:

p	q	r	$(p \vee q) \leftrightarrow r$
T	T	T	T
T	T	F	F
T	F	T	T
F	T	T	T
T	F	F	F
F	T	F	F
F	F	T	F
F	F	F	T

TAUTOLOGY

A compound statement is called a tautology if it is always true for all possible truth values of its component statements.

A tautology is also called a theorem or a logically valid statement pattern.

CONTRADICTION

A compound statement is called a **contradiction** if it is always false for all possible truth values of its components statements.

A contradictions is also called a fallacy.

Remark. (i) The negation of a tautology is a contradiction.

(ii) The negation of a contradiction is a tautology.

1. Show that :

(i) $p \to (p \vee q)$ is a tautology *(ii) $(p \vee q) \wedge (\sim p \wedge \sim q)$ is a contradiction.*

Sol :

Truth values of $p \to (p \vee q)$

p	q	$p \vee q$	$p \to (p \vee q)$
T	T	T	T
T	F	T	T
F	T	T	T
F	F	F	T

$\therefore$ For all possible truth values of p and q, the compound statement : $p \to (p \vee q)$ is true.

$\therefore$ $p \to (p \vee q)$ is a tautology.

(ii) **Truth values of $(p \vee q) \wedge (p \wedge \sim q)$**

p	q	$\sim p$	$\sim q$	$p \vee q$	$\sim p \wedge \sim q$	$(p \vee q) \wedge (\sim p \wedge \sim q)$
T	T	F	F	T	F	F
T	F	F	T	T	F	F
F	T	T	F	T	F	F
F	F	T	T	F	T	F

$\therefore$ For all possible truth values of p and q, the compound statement : $(p \vee q) \wedge (\sim p \wedge \sim q)$ is

false.

$\therefore$ $(p \vee q) \wedge (\sim p \wedge \sim\ )$ is a contradiction.

2. Show that $(p \wedge q) \vee (\sim p) \vee (p \wedge \sim q)$ is a tautololgy.

Sol :

p	q	$\sim p$	$\sim q$	$p \wedge q$	$(p \wedge q) \vee (\sim p)$	$p \wedge \sim q$	$(p \wedge q) \vee (\sim p) \vee (p \wedge \sim q)$
T	T	F	F	T	T	F	T
T	F	F	T	F	F	T	T
F	T	T	F	F	T	F	T
F	F	T	T	F	T	F	T

$\therefore$ For all possible truth values of p and q, the compound statement : $(p \wedge q) \vee (\sim p) \vee (p \wedge \sim q)$ is true.

$\therefore$ $(p \wedge q) \vee (\sim p) \vee (p \wedge \sim q)$ is a tautology.

3. Show that $[(p \vee q) \vee r] \leftrightarrow [p \vee (q \vee r)]$ is a tautology.

Sol :

Truth values of $[(p \vee q) \vee r] \leftrightarrow [p \vee (q \vee r)]$

p	q	r	$p \vee q$	$(p \vee q) \vee r$	$q \vee r$	$p \vee (q \vee r)$	$[(p \vee q) \vee r] \leftrightarrow [p \vee (q \vee r)]$
T	T	T	T	T	T	T	T
T	T	F	T	T	T	T	T
T	F	T	T	T	T	T	T
F	T	T	T	T	T	T	T
T	F	F	T	T	F	T	T
F	T	F	T	T	T	T	T
F	F	T	F	T	T	T	T
F	F	F	F	F	F	F	T

$\therefore$ For all possible truth values of p, q and r, the compound statement : $[p \vee q) \vee r] \leftrightarrow [p \vee (q \vee r)]$ is true.

$\therefore$ $[(p \vee q) \vee r] \leftrightarrow [p \vee (q \vee r)]$ is a tautology.

4. Show that $[(p \rightarrow q) \wedge (q \rightarrow r)] \rightarrow (p \rightarrow r)$ is a tautology.

Sol :

Truth values of $[(p \rightarrow q) \wedge (q \rightarrow r)] \rightarrow (p \rightarrow r)$

p	q	r	$p \to q$	$q \to r$	$(p \to q) \wedge (q \to r)$	$p \to r$	$[(p \to q) \wedge (q \to r)] \to (p \to r)$
T	T	T	T	T	T	T	T
T	T	F	T	F	F	F	T
T	F	T	F	T	F	T	T
F	T	T	T	T	T	T	T
T	F	F	F	T	F	F	T
F	T	F	T	F	F	T	T
F	F	T	T	T	T	T	T
F	F	F	T	T	T	T	T

$\therefore$ For all possible truth values of p and q the compound statement :

$[(p \to q) \to (q \to r)] \to (p \to r)$ is true.

$\therefore$ $[(p \to q) \to (q \to r)] \to (p \to r)$ is a tautology.

WORKING RULES FOR SOLVING PROBLEMS

Rule I. *If a compound statement is true for all possible truth values of its component statements, then it is a tautology.*

Rule II. *If a compound statement is false for all possible truth values of its component statements, then it is a fallacy.*

Exercise

1. Show that :

(*i*) $p \vee \sim p$ is a tautology (*ii*) $p \wedge \sim p$ is a contradiction.

2. Show that :

(*i*) $(p \wedge q) \to p$ is a tautology (*ii*) $p \to (p \vee q)$ is a tautology.

3. Show that :

(*i*) $(p \wedge q) \to (p \vee q)$ is a tautology (*ii*) $\sim [(p \wedge q) \to (p \vee q)]$ is a contradiction.

4. Show that :

(*i*) $(p \wedge q) \wedge \sim (p \vee q)$ is a fallacy (*ii*) $(p \wedge q) \wedge \sim (p \wedge q)$ is a fallacy

(*iii*) $(p \wedge q) \wedge (\sim p \wedge \sim q)$ is a fallacy.

5. Show that :

(*i*) $(p \to q) \leftrightarrow (\sim p \vee q)$ is a tautology (*ii*) $\sim (p \vee q) \leftrightarrow (\sim p \wedge \sim q)$ is a tautology.

6. Find which of the following compound statements are tautologies and which are fallacies :

(i) $(p \wedge q) \wedge (\sim (p \wedge q))$ (ii) $((\sim q) \wedge p) \vee (p \vee \sim p)$

(iii) $(p \wedge \sim q) \wedge ((\sim p) \vee q)$ (iv) $((\sim p) \vee q) \vee (p \wedge \sim q)$.

7. Show that :

(i) $((\sim p) \wedge q) \wedge (q \wedge r)) \wedge \sim q$ is a tautology.

8. Show that :

(i) $[(p \leftrightarrow q) \wedge ((q \rightarrow r) \wedge r)] \rightarrow r$ is a tautology.

ANSWERS

Answers

6. (i) Fallacy (ii) Tautology

(iii) Fallacy (iv) Tautology.

LOGICAL EQUIVALENCE

Two compound statement $S_1(p, q, r, ...)$ and $S_2(p, q, r, ...)$ of components statements p, q, r, ... are called **logically equivalent** or simply equivalent or equal if they have indentical truth values and we write $S_1(p, q, r, ...) \equiv S_2(p, q, r, ...)$

1. Show that the compound statements $(p \vee q) \wedge \sim q$ and $\sim p \wedge q$ are logically equivalent.

Sol :

Truth values of $(p \vee q) \wedge \sim p$

p	q	$\sim p$	$p \vee q$	$(p \vee q) \wedge \sim p$
T	T	F	T	F
T	F	F	T	F
F	T	T	T	T
F	F	T	F	F

Truth values of $\sim p \wedge q$

p	q	$\sim p$	$\sim p \wedge q$
T	T	F	F
T	F	F	F
F	T	T	T
F	F	T	F

$\therefore$ $(p \vee q) \wedge \sim p$ and $\sim p \wedge q$ have identical truth values.

$\therefore$ $(p \vee q) \wedge \sim p \equiv \sim p \wedge q$.

2. Show that : $\sim (p \leftrightarrow q) \equiv (p \wedge \sim q) \vee (\sim p \wedge q)$.

Sol :

Truth values of $\sim (p \leftrightarrow q)$

p	q	$p \leftrightarrow q$	$\sim (p \leftrightarrow q)$
T	T	T	F
T	F	F	T
F	T	F	T
F	F	T	F

Truth values of $(p \wedge \sim q) \vee (\sim p \wedge q)$

p	q	$\sim p$	$\sim q$	$p \wedge \sim q$	$\sim p \wedge q$	$(p \wedge \sim q) \vee (\sim p \wedge q)$
T	T	F	F	F	F	F
T	F	F	T	T	F	T
F	T	T	F	F	T	T
F	F	T	T	F	F	F

$\therefore$ $\sim (p \leftrightarrow q)$ and $(p \wedge \sim q) \vee (\sim p \wedge q)$ have identical truth values.

$\therefore$ $\sim (p \leftrightarrow q) \equiv (p \wedge \sim q) \vee (\sim p \wedge q)$.

3. Show that the compound statements : $\sim [\sim (\sim p \wedge q) \vee \sim r]$ and $((\sim p) \wedge q) \wedge r$ are equivalent.

Sol :

Truth values of ~ [~ (~ p ∧ q) ∨ ~ r]

p	q	r	$\sim p$	$\sim r$	$\sim p \wedge q$	$\sim(\sim p \wedge q)$	$\sim(\sim p \wedge q) \vee \sim r$	$\sim[\sim(\sim p \wedge q) \vee \sim r]$
T	T	T	F	F	F	T	T	F
T	T	F	F	T	F	T	T	F
T	F	T	F	F	F	T	T	F
F	T	T	T	F	T	F	F	T
T	F	F	F	T	F	T	T	F
F	T	F	T	T	T	F	T	F
F	F	T	T	F	F	T	T	F
F	F	F	T	T	F	T	T	F

Truth values of (~ p ∧ q) ∧ r

p	q	r	$\sim p$	$\sim p \wedge q$	$(\sim p \wedge q) \wedge r$
T	T	T	F	F	F
T	T	F	F	F	F
T	F	T	F	F	F
F	T	T	T	T	T
T	F	F	F	F	F
F	T	F	T	T	F
F	F	T	T	F	F
F	F	F	T	F	F

$\therefore \sim[\sim(\sim p \wedge q) \vee \sim r]$ and $(\sim p \wedge q) \wedge r$. have identical values.

$\therefore \sim[\sim(\sim p \wedge q) \vee \sim r] \equiv (\sim p \wedge q) \wedge r$.

4. Find which of the following pairs are logically equivalent :

(i) $(p \wedge q) \vee [\sim p \vee (p \wedge \sim q)]$ and $(\sim p \wedge q) \vee$ where t is a tautology in terms of statements p and q.

(ii) $\sim(p \vee q) \wedge (p \vee \sim r) \wedge (\sim p \vee \sim q)$ and $p \vee r$.

Sol : (i)

Truth table of (p ∧ q) ∨ [~ p ∨ (p ∧ ~ q)]

p	q	$\sim p$	$\sim q$	$p \wedge q$	$p \wedge \sim q$	$\sim p \vee (p \wedge \sim q)$	$(p \wedge q) \vee [\sim p \vee (p \wedge \sim q)]$
T	T	F	F	T	F	F	T
T	F	F	T	F	T	T	T
F	T	T	F	F	F	T	T
F	F	T	T	F	F	T	T

Truth table of (~ p ∧ q) ∨ t

p	q	$\sim p$	$\sim p \wedge q$	t	$(\sim p \wedge q) \vee t$
T	T	F	F	T	T
T	F	F	F	T	T
F	T	T	T	T	T
F	F	T	F	T	T

$\therefore (p \wedge q) \vee [\sim p \vee (p \wedge \sim q)]$ and $(\sim p \wedge q) \vee t$ have identical truth values.

$\therefore$ Given compound statements are logically equivalent.

(ii)

Truth table of $\sim(p \vee q) \wedge (p \vee \sim r) \wedge (\sim p \vee \sim q)$

p	q	r	$\sim p$	$\sim q$	$\sim r$	$p \vee q$	$\sim(p \vee q)$	$p \vee \sim r$	$\sim p \vee \sim q$	$\sim(p \vee q) \wedge (p \vee \sim r)$	$\sim(p \vee q) \wedge (p \vee \sim r) \wedge (\sim p \vee \sim q)$
T	T	T	F	F	T	T	F	T	F	F	F
T	T	F	F	F	T	T	F	T	F	F	F
T	F	T	F	T	T	T	F	T	T	F	F
F	T	T	T	F	F	T	F	F	T	F	F
T	F	F	F	T	T	T	F	T	T	F	F
F	T	F	T	F	F	T	F	F	T	F	F
F	F	T	T	T	F	F	T	F	T	F	F
F	F	F	T	T	F	F	T	F	T	F	F

Truth table of $p \vee r$

p	q	r	$p \vee r$
T	T	T	T
T	T	F	T
T	F	T	T
F	T	T	T
T	F	F	T
F	T	F	F
F	F	T	T
F	F	F	F

$\therefore \sim(p \vee q) \wedge (p \vee \sim r) \wedge (\sim p \vee \sim q)$ and $p \vee r$ do not have identical truth values.

$\therefore$ Given compound statements are not logically equivalent.

Exercise

1. **Show that :** $p \wedge (p \vee q) \equiv p$.

2. **Show that :**

(i) $\sim(\sim p \wedge q) \equiv p \vee \sim q$

(ii) $\sim(p \wedge \sim q) \equiv \sim p \vee q$

(iii) $\sim(\sim p \vee \sim q) \equiv p \wedge q$.

3. **Show that :**

(i) $p \rightarrow q \equiv (\sim p) \vee q$ (ii) $p \rightarrow q \not\equiv q \rightarrow p$.

4. **Show that :** $p \leftrightarrow q \equiv (p \rightarrow q) \wedge (q \rightarrow p)$.

5. **Show that :**

(i) $p \rightarrow q \equiv \sim q \rightarrow \sim p$ (ii) $p \rightarrow \sim q \equiv q \rightarrow \sim p$ (iii) $\sim (p \rightarrow q) \equiv$

6. **Show that :** $\sim (p \leftrightarrow q) \equiv (\sim p) \leftrightarrow q \equiv p \leftrightarrow \sim q$.

7. Find which of the following pairs of compound statement are logically equivalent :

(i) $\sim p \vee q$ and $\sim (p \vee q)$.

(ii) $p \vee (p \wedge q)$ and p.

(iii) $(\sim p \vee q) \vee (p \wedge \sim q)$ and $(p \wedge q) \vee t$ where t is a tautology in terms of statements p and q.

(iv) $(\sim q \wedge p) \wedge (p \wedge \sim p)$ and $(p \wedge q) \wedge f$ where f is a fallacy in terms of statement p and q.

8. Show that : $p \rightarrow (q \wedge r) \equiv (p \rightarrow q) \wedge (p \rightarrow r)$.

9. Show that : $\sim (p \rightarrow (q \wedge \sim r)) \equiv p \wedge \sim (q \wedge \sim r) \equiv p \wedge (-q \vee r)$.

10. Find which of the following pairs of compound statements are logically equivalent :

(i) $\sim [(p \vee q) \vee r]$ and $\sim [p \vee (q \vee r)]$

(ii) $(\sim p \vee q) \wedge (p \vee \sim r) \wedge (\sim p \vee \sim q)$ and $\sim (p \vee r)$.

Answers

7. (ii),(iii) **10.** (i), (ii)

ALGEBRA OF STATEMENTS

I. Idempotent laws. If p is any statement then

(i) $p \vee p \equiv p$

(ii) $p \wedge p \equiv p$

Proof.

Truth values $p \vee p$ **and** $p \wedge p$

p	$p \vee p$	$p \wedge p$
T	T	T
F	F	F

$\therefore$ $p \vee p \equiv p$ and $p \wedge p \equiv p$.

II. Complement laws. If p is any statement, then

(*i*) $\mathbf{p \vee \sim p \equiv t}$ (*ii*) $\mathbf{p \wedge \sim p = f}$ (*iii*) $\mathbf{\sim \sim p \equiv p}$ (*iv*) $\mathbf{\sim t \equiv f, \sim f \equiv t,}$

where t and f are respectively some tautology and fallacy in terms of the statement p.

Proof:

Proof. **Truth values of $p \vee \sim p$, $p \wedge \sim p$, $\sim \sim p$, $\sim t$, $\sim f$**

p	$\sim p$	$p \vee \sim p$	t	$p \wedge \sim p$	f	$\sim \sim p$	$\sim t$	$\sim f$
T	F	T	T	F	F	T	F	T
F	T	T	T	F	F	F	F	T

$\therefore$ $p \vee \sim p \equiv t$, $p \wedge \sim p \equiv f$, $\sim \sim p \equiv p$, $\sim t \equiv f$, $\sim f \equiv t$.

III. Identify laws. If p is any statement, then

(*i*) $\mathbf{p \wedge t = p}$ (*ii*) $\mathbf{p \wedge f = f}$ (*iii*) $\mathbf{p \vee t = t}$ (*iv*) $\mathbf{p \vee f = p.}$

where t and f are respectively some tautology and fallacy in terms of the statement p.

Proof

Proof. **Truth values of $p \wedge t$, $p \wedge f$, $p \vee t$, $p \vee f$**

p	t	f	$p \wedge t$	$p \wedge f$	$p \vee t$	$p \vee f$
T	T	F	T	F	T	T
F	T	F	F	F	T	F

$\therefore$ $p \wedge t \equiv p$, $p \wedge f \equiv f$, $p \vee t \equiv t$, $p \vee f \equiv p$.

IV. Commutative laws. If p and q be any two statements then

(*i*) $\mathbf{p \wedge q = q \wedge p}$ (*ii*) $\mathbf{p \vee q = q \vee p.}$

Proof

Proof. Truth values of $p \wedge q$, $q \wedge p$, $q \vee p$, $p \vee q$

p	q	$p \wedge q$	$q \wedge p$	$p \vee q$	$q \vee p$
T	T	T	T	T	T
T	F	F	F	T	T
F	T	F	F	T	T
F	F	F	F	F	F

$\therefore \quad p \wedge q \equiv q \wedge p, \quad p \vee q \equiv q \vee p.$

V. De Morgan's laws. If p and q be any two statements, then

$(i) \sim (p \wedge q) \equiv \sim p \vee \sim q$ $\qquad$ $(ii) \sim (p \vee q) \equiv \sim p \wedge \sim q.$

Proof. (i)

Truth values of $\sim (p \wedge q)$

p	q	$p \wedge q$	$\sim (p \wedge q)$
T	T	T	F
T	F	F	T
F	T	F	T
F	F	F	T

$\therefore \quad \sim (p \wedge q) \equiv \sim p \vee \sim q.$

Truth values of $\sim p \vee \sim q$

p	q	$\sim p$	$\sim q$	$\sim p \vee \sim q$
T	T	F	F	F
T	F	F	T	T
F	T	T	F	T
F	F	T	T	T

Proof.

(ii) Truth values of $\sim (p \vee q)$

p	q	$p \vee q$	$\sim (p \vee q)$
T	T	T	F
T	F	T	F
F	T	T	F
F	F	F	T

$\therefore \quad \sim (p \vee q) \equiv \sim p \wedge \sim q.$

Truth values of $\sim p \wedge \sim q$

p	q	$\sim p$	$\sim q$	$\sim p \wedge \sim q$
T	T	F	F	F
T	F	F	T	F
F	T	T	F	F
F	F	T	T	T

VI. Associative laws. If p, q, r be any three statements then

$(i)\ (p \wedge q) \wedge r \equiv p \wedge (q \wedge r)$ $\qquad$ $(ii)\ (p \vee q) \vee r \equiv p \vee (q \vee r).$

Proof. (i)

Truth values of $(p \wedge q) \wedge r$

p	q	r	$p \wedge q$	$(p \wedge q) \wedge r$
T	T	T	T	T
T	T	F	T	F
T	F	T	F	F
F	T	T	F	F
T	F	F	F	F
F	T	F	F	F
F	F	T	F	F
F	F	F	F	F

Truth values of $p \wedge (q \wedge r)$

p	q	r	$q \wedge r$	$p \wedge (q \wedge r)$
T	T	T	T	T
T	T	F	F	F
T	F	T	F	F
F	T	T	T	F
T	F	F	F	F
F	T	F	F	F
F	F	T	F	F
F	F	F	F	F

$\therefore \quad (p \wedge q) \wedge r \equiv p \wedge (q \wedge r).$

(ii) Proof is left for the reader.

VII. Distributive laws. If p, q, r be any three statements, then

(*i*) $\mathbf{p \wedge (q \vee r) \equiv (p \wedge q) \vee (p \wedge r)}$ (*ii*) $\mathbf{p \vee (q \wedge r) \equiv (p \vee q) \wedge (p \vee r)}$.

Proof . (i)

p	q	r	$q \vee r$	$p \wedge (q \vee r)$
T	T	T	T	T
T	T	F	T	T
T	F	T	T	T
F	T	T	T	F
T	F	F	F	F
F	T	F	T	F
F	F	T	T	F
F	F	F	F	F

p	q	r	$p \wedge q$	$p \wedge r$	$(p \wedge q) \vee (p \wedge r)$
T	T	T	T	T	T
T	T	F	T	F	T
T	F	T	F	T	T
F	T	T	F	F	F
T	F	F	F	F	F
F	T	F	F	F	F
F	F	T	F	F	F
F	F	F	F	F	F

$\therefore \quad p \wedge (q \vee r) \equiv (p \wedge q) \vee (p \wedge r).$ **c**

(ii) Proof is left for the reader.

1. By using laws of algebra of statements, shows that :

$(p \vee q) \wedge \sim p \equiv \sim p \wedge q.$

Sol :

$$
\begin{aligned}
(p \vee q) \wedge \sim p &\equiv (\sim p) \wedge (p \vee q) && \text{(Using Commutative law)} \\
&\equiv (\sim p \wedge p) \vee (\sim p \wedge q) && \text{(Using Distributive law)} \\
&\equiv f \vee (\sim p \wedge q) && \text{(Using Complement law)} \\
&\equiv \sim p \wedge q && \text{(Using Identity law)}
\end{aligned}
$$

$\therefore \quad \mathbf{(p \vee q) \wedge \sim p \equiv \sim p \wedge q.}$

2. By using lawas of algebra of statements, show that :

$\sim (p \vee q) \vee (\sim p \wedge q) \equiv \sim p.$

Sol :

$$\sim(p \vee q) \vee (\sim p \wedge q)$$

$$\equiv (\sim p \wedge \sim q) \vee (\sim p \wedge q) \quad \text{(Using De Morgan's law)}$$

$$\equiv \sim p \wedge (\sim q \vee q) \quad \text{(Using Distributive law)}$$

$$\equiv \sim p \wedge t \quad (\because \sim q \vee q = t)$$

$$\equiv \sim p \quad \text{(Using Identity law)}$$

$$\therefore \quad \sim(p \vee q) \vee (\sim p \wedge q) \equiv \sim p.$$

WORKING RULES FOR SOLVING PROBLEMS

Rule I. **Idempotent laws**
(i) $p \vee p \equiv p$, (ii) $p \wedge p \equiv p$.

Rule II. **Complement laws**
(i) $p \vee \sim p \equiv t$, (ii) $p \wedge \sim p \equiv f$, (iii) $\sim\sim p \equiv p$, (iv) $\sim t \equiv f$, $\sim f \equiv t$.

Rule III. **Identity laws**
(i) $p \wedge t \equiv p$, (ii) $p \wedge f \equiv f$, (iii) $p \vee t \equiv t$, (iv) $p \vee f \equiv p$.

Rule IV. **Commutative laws**
(i) $p \wedge q \equiv q \wedge p$, (ii) $p \vee q \equiv q \vee p$.

Rule V. **De Morgan's laws**
(i) $\sim(p \wedge q) \equiv \sim p \vee \sim q$, (ii) $\sim(p \vee q) \equiv \sim p \wedge \sim q$.

Rule VI. **Associative laws**
(i) $(p \wedge q) \wedge r \equiv p \wedge (q \wedge r)$, (ii) $(p \vee q) \vee r \equiv p \vee (q \vee r)$.

Rule VII. **Distributive laws**
(i) $p \wedge (q \vee r) \equiv (p \wedge q) \vee (p \wedge r)$ (ii) $p \vee (q \wedge r) \equiv (p \vee q) \wedge (p \vee r)$.

EXERCISE

By using laws of algebra of statements, prove that following logical equivalences :

1. $\sim\sim\sim p \equiv \sim p$
2. $\sim(\sim p \vee \sim q) \equiv p \wedge q$
3. $\sim(\sim p \wedge \sim q) \equiv p \vee q$
4. $\sim(p \vee \sim q) \equiv \sim p \wedge q$
5. $\sim(\sim p \wedge q) \equiv p \vee \sim q$
6. $p \wedge (p \vee q) \equiv p \vee (p \wedge q)$
7. $(p \wedge q) \vee \sim p \equiv \sim p \vee q$
8. $p \wedge (\sim p \vee q) \equiv p \wedge q$
9. $p \vee (p \wedge q) \equiv p$.

Hint

9. $p \vee (p \wedge q) \equiv (p \wedge t) \vee (p \wedge q) \equiv p \wedge (t \vee q) \equiv p \wedge t \equiv p$.

DUALITY

(i) **Duality of connectives.** The connectives $\wedge$ and $\vee$ are called duals of each other.

(ii) **Duality of compound statements.** Two compound statements are called duals of each other if one can be obtained from the other by replacing $\wedge$ by $\vee\vee$, $\vee$ by $\wedge$, tautology t by fallacy f and fallacy f by tautology t.

Illustrations,

(a) The compound statements $(p \vee q) \wedge r$ and $(p \wedge q) \vee r$ are duals of each other.

(b) The compound statements $(p \wedge q) \vee (r \vee t)$ and $(p \vee q) \wedge (r \wedge f)$ are duals of each other.

(iii) **Duality of logical equivalences.** Two logical equivalences are called duals of each other if one can be obtained from the other by replacing $\wedge$ by $\vee$ and $\vee$ by $\wedge$.

Illustrations, (a) The logical equivalences $\sim(p \wedge q) \equiv \sim p \vee \sim q$ and $\sim(p \vee q) \sim p \wedge \sim q$ are duals of each other.

(b) The logical equivalences $p \wedge (q \vee r) = (p \wedge q) \vee (p \wedge r)$ and

$p \vee (q \wedge r) = (p \vee q) \wedge (p \vee r)$ are duals of each other.

An important result.

Let S(p, q, r,) be a compound statement in terms of finitely many state ments p, q, r, If S* (p, q, r,) be the dual compound statement of S(p, q, r,.....), then

~ S*(p, q, r, ...) ≡ S(~ p, ~q, r, ...).

1. Write the dual statements of the following compound statements :

(i) Ram is honest and Shyam is intelligent.

(ii) Kamla is beautiful or Bimla is rich.

Sol :

(i) Let p : Ram is honest

and q : Shyam is intelligent.

$\therefore$ Given compound statement is $p \wedge q$.

$\therefore$ The dual statement of $p \wedge q$ is $p \wedge q$ i.e., **Ram is honest or Shyam is intelligent.**

(ii) Let p : Kamla is beautiful

and q : Bimla is rich.

$\therefore$ Given compound statement is $p \vee q$.

$\therefore$ The dual statement of $p \vee q$ is $p \wedge q$ i.e., **Kamla is beautiful and Bimla is rich.**

2. Write the duals of the following compound statements :

(i) $(p \vee q) \wedge \sim p$ (ii) $[(p \vee r) \wedge (p \wedge q)] \vee f$

(iii) $[(p \wedge \sim q) \vee (\sim p \wedge q)] \vee [p \wedge q \wedge t]$.

Sol :

(*i*) The dual of $(p \vee q) \wedge \sim p$ is $\mathbf{(p \wedge q) \vee \sim p}$.

(*ii*) The dual of $[(p \vee r) \wedge (p \wedge q)] \vee f$ is $\mathbf{[(p \wedge r) \vee (p \vee q)] \wedge t}$.

(*iii*) The dual of $[(p \wedge \sim q) \vee (\sim p \wedge q)] \vee [p \wedge q \wedge t]$ is $\mathbf{[(p \vee \sim q) \wedge (\sim p \vee q) \wedge [p \vee q \vee f]}$.

3.

If $S(p, q) = (p \vee \sim q) \wedge p$ and $S^*(p, q)$ be the dual of $S(p, q)$ then verify that

$$\sim S^*(p, q) \equiv S(\sim p, \sim q).$$

Sol :

We have $S(p, q) = (p \vee \sim q) \wedge p$.

$\therefore \quad S^*(p, q) = \text{dual of } S(p, q) = (p \wedge \sim q) \vee p.$

$\therefore \quad \sim S^*(p, q) = \sim [(p \wedge \sim q) \vee p]$

$\equiv \sim (p \wedge \sim q) \wedge \sim p \equiv (\sim p \vee q) \wedge \sim p. \qquad (\because \sim\sim q \equiv q)$

Also, $S(\sim p, \sim q) = (\sim p \vee \sim\sim q) \wedge \sim p \equiv (\sim p \vee q) \wedge \sim p.$

$\therefore \quad \mathbf{\sim S^*(p, q) \equiv S(\sim p, \sim q).}$

4.

If $S(p, q, r) = p \vee (q \vee r)$ and $S^*(p, q, r)$ be the dual of $S(p, q, r)$ then verify that

$$\sim S^*(p, q, r) \equiv S(\sim p, \sim q, \sim r).$$

Sol :

We have $S(p, q, r) = p \vee (q \vee r)$.

$\therefore \quad S^*(p, q, r) = \text{dual of } S(p, q, r) = p \wedge (q \wedge r)$

$\therefore \quad \sim S^*(p, q, r) = \sim [p \wedge (q \wedge r)]$

$\equiv \sim p \vee \sim (q \wedge r)$

$\equiv \sim p \vee (\sim q \vee \sim r).$

Also $S(\sim p, \sim q, \sim r) = \sim p \vee (\sim q \vee \sim r).$

$\therefore \quad \mathbf{\sim S^*(p, q, r) \equiv S(\sim p, \sim q, \sim r).}$

EXERCISE

1. Write the duals of the following compound statements :

(*i*) $(p \wedge q) \wedge \sim p$

(*ii*) $(p \vee q) \wedge (p \wedge r)$

(*iii*) $[(p \vee r) \vee (\sim p \vee \sim q)] \wedge r$

(*iv*) $\sim (p \vee q) \wedge [p \vee \sim (q \wedge \sim s)]$

(*v*) $[(p \vee q) \wedge \sim r] \vee (p \wedge t)$

(*vi*) $(\sim p \vee f) \wedge [\sim q \wedge (p \vee q) \wedge \sim r]$.

2. Verify that $\sim S^*(p, q) \equiv S(\sim p, \sim q)$ if S* (p, q) is the dual of the compound statement S (p, q) and S (p, q) is equal to :

(i) $p \wedge q$ (ii) $p \vee q$.

3. Verify that $\sim S^*(p, q, r) \equiv S(\sim p, \sim q, \sim r)$ If S* (p, q, r) is the dual of the compound statement S (p, q, r) and S (p, q, r) is equal to :

(i) $p \wedge (q \vee r)$ (ii) $\sim p \wedge \sim (q \vee r)$.

ANSWERS

1.

(i) $(p \vee q) \vee \sim p$ (ii) $(p \wedge q) \vee (p \vee r)$

(iii) $[(p \wedge r) \wedge (\sim p \wedge \sim q)] \vee r$ (iv) $\sim (p \wedge q) \vee [p \wedge \sim (q \vee \sim s)]$

(v) $[(p \wedge q) \vee \sim r] \wedge (p \vee f)$ (vi) $(\sim p \wedge t) \vee [\sim q \vee (p \wedge q) \vee \sim r]$.

NEGATION OF COMPOUND STATEMENTS

(i) Negation of conjunction. Let p and q be any statements. The negation $\sim (p \wedge q)$ of the conjunction $p \wedge q$ is given by De Morgan's law and we have

$\sim (p \wedge q) \equiv \sim p \vee \sim q$.

(ii) **Negation of disjunction.** Let p and q be any statements. The negation $\sim (p \vee q)$ of the disjunction $p \vee q$ is given by De Morgan's law and we have

$\sim (p \vee q) = \sim p \wedge \sim q$.

Remark. The compound statement $\sim p \wedge \sim q$ represent 'neither p nor q'. The compound statement $\sim p \wedge \sim q$ is also called the **joint denial** of statements p and q and is denoted by $p \downarrow q$.

$\therefore\ p \downarrow q = \sim p \wedge \sim q$.

(iii) **Negation of conditional statement.** Let p and q be any statements. The compound statements $p \rightarrow q$ and $\sim p \vee q$ are logically equivalent. The negation $\sim (p \rightarrow q)$ of the conditional statement $p \rightarrow q$ is given by

$$\sim (p \to q) \equiv \sim (\sim p \vee q) \equiv \sim\sim p \wedge \sim q \equiv p \wedge \sim q.$$

$$\therefore \quad \sim (\mathbf{p} \to \mathbf{q}) \equiv \mathbf{p} \wedge \sim \mathbf{q}.$$

(iv) **Negation of biconditional statement**. Let p and q be any statements. The compound statements $p \leftrightarrow q$ and $(p \leftrightarrow q) \wedge (q \to p)$ are logically equivalent. The negation $\sim (p \leftrightarrow q)$ of the biconditional statement $p \leftrightarrow q$ is given by

$$\sim (p \leftrightarrow q) \equiv \sim [(p \to q) \wedge (q \to p)] \equiv \sim (p \to q) \vee \sim (q \to p)$$

$$\equiv \sim (\sim p \vee q) \vee \sim (\sim q \vee p) \equiv (\sim\sim p \wedge \sim q) \vee (\sim\sim q \wedge \sim p) \equiv (p \wedge \sim q) \vee (\sim p \wedge q)$$

$$\therefore \quad \sim (\mathbf{p} \leftrightarrow \mathbf{q}) \equiv (\mathbf{p} \wedge \sim \mathbf{q}) \vee (\sim \mathbf{p} \wedge \mathbf{q}).$$

1. Find the negation of the following compound statements :

(i) $p \wedge \sim q$ (ii) $\sim p \to q$ (iii) $(p \to q) \to (q \to p)$.

Sol :

(i) Negation of $(p \wedge \sim q) \equiv \sim (p \wedge \sim q)$

$$\equiv \sim p \vee \sim\sim q \equiv \sim p \vee q.$$

(ii) Negation of $(\sim p \to q) \equiv \sim (\sim p \to q)$

$$\equiv \sim (\sim\sim p \vee q) \qquad (\because \quad p \to q \equiv \sim p \vee q)$$

$$\equiv \sim (p \vee q) \equiv \sim p \wedge \sim q.$$

(iii) Negation of $[(p \to q) \to (q \to p)] \equiv \sim [(p \to q) \to (q \to p)]$

$$\equiv \sim [\sim (p \to q) \vee (q \to p)] \equiv \sim\sim (p \to q) \wedge \sim (q \to p)$$

$$\equiv (p \to q) \wedge \sim (q \to p) \equiv (\sim p \vee q) \wedge \sim (\sim q \vee p)$$

$$\equiv (\sim p \vee q) \wedge (\sim\sim q \wedge \sim p) \equiv (\sim p \vee q) \wedge (q \wedge \sim p).$$

WORKING RULES FOR SOLVING PROBLEMS

Rule I. $\sim (p \wedge q) \equiv \sim p \vee \sim q.$

Rule II. $\sim (p \vee q) \equiv \sim p \wedge \sim q.$

Rule III. $\sim (p \to q) \equiv p \wedge \sim q.$

Rule IV. $\sim (p \leftrightarrow q) \equiv (p \wedge \sim q) \vee (\sim p \wedge q).$

EXERCISE

Find the negation of the following compound statement ;

1. $\sim p \wedge q$
2. $\sim p \wedge \sim q$
3. $\sim p \vee q$
4. $p \vee \sim q$
5. $\sim p \vee \sim q$
6. $p \to \sim q$
7. $\sim p \to \sim q$
8. $p \leftrightarrow \sim q$
9. $\sim p \leftrightarrow q$
10. $\sim p \leftrightarrow \sim q.$

ANSWERS

1. $p \vee \sim q$ 2. $p \vee q$ 3. $p \wedge \sim q$ 4. $\sim p \wedge q$
5. $p \wedge q$ 6. $p \wedge q$ 7. $\sim p \wedge q$ 8. $(p \wedge q) \vee (\sim p \wedge \sim q)$
9. $(p \wedge q) \vee (\sim p \wedge \sim q)$ 10. $(\sim p \wedge q) \vee (p \wedge \sim q)$.

USE OF LOGICAL TRUTH TABLES FOR CHECKING THE VALDILITY OF ARGUMENTS

Argument. An **argument** is a statement which asserts that a given set of n statements $S_1, S_2, \ldots\ldots, S_n$ yield another statement S. This argument is denoted as : $S_1, S_2, \ldots\ldots, S_n \vdash S$. The statements $S_1, S_2, \ldots\ldots, S_n$ are called **hypotheses or premises or assumptions.** The statement S is called **conclusion.** The symbol '⊢' is called turnsile. The argument $S_1, S_2, \ldots\ldots, S_n \vdash S$ is defined to be true if S is true whenever $S_1, S_2, \ldots\ldots, S_n$ are all true otherwise the argument is defined to be false. A true argument is a also called a **valid argument.** We have seen that the argument $S_1, S_2, \ldots, S_n \vdash S$ is valid if S is true whenever $S_1, S_2, \ldots, S_n$ are all true.

$\therefore$ The argument $S_1, S_2, \ldots\ldots, S_n \vdash S$ is valid if S is true whenever $S_1 \wedge S_2 \wedge \ldots\ldots \wedge S_n$ is true.

$\therefore$ **The argument $S_1, S_2, \ldots, S_n \vdash S$ is valid if $(S_1 \wedge S_2 \wedge \ldots\ldots \wedge S_n) \rightarrow S$ is a tautology.**

($\because$ $p \rightarrow q$ be false only when q is false whenever p is true.)

This gives an alternative method to check the validity of an argument.

Thus, we have the following two methods to check the validity of an argument:

Method I. The argument $S_1, S_2, \ldots, S_n \vdash S$ is valid if S is true whenever $S_1, S_2, \ldots, S_n$ are all true.

Method II. The argument $S_1, S_2, \ldots, S_n \vdash S$ is valid if the compound statement $(S_1 \wedge S_2 \wedge \ldots\ldots \wedge S_n) \rightarrow S$ is a tautology.

WORKING RULES FOR SOLVING PROBLEMS

Step I. *Identify component statements in the given argument and denote these as p, q, r, ...*

Step II. *Identify the 'assumptions' in the given argument and denote these as $S_1, S_2, S_3, \ldots\ldots, S_n$.*

Step III. *Identify the 'conclusion' in the given argument and denote this as S.*

Step IV. *Express $S_1, S_2, S_3, \ldots\ldots, S_n$ and S in terms of statements p, q, r, ...*

Step V. *Find the truth values of $S_1, S_2, S_3, \ldots\ldots, S_n$.*

Step VI. *If S is true whenever $S_1, S_2, S_3, \ldots\ldots, S_n$ are all true then the argument $S_1, S_2, S_3, \ldots\ldots, S_n \vdash S$ is valid otherwise it is invalid.*

Or

Step VI'. *If $(S_1 \wedge S_2 \wedge \ldots\ldots \wedge S_n) \rightarrow S$ is a tautology then the argument $S_1, S_2, \ldots\ldots, S_n \vdash S$ is valid otherwise it is invalid.*

1. Test the validity of the following argument:

"If it is a good watch, then it is a Titen. watch. It is a Titen watch therefore it is a good watch".

Sol :

Let p - It is a good watch

and q — It is a Titen watch.

∴ The assumptions are $p \to q$, q and the conclusion is p.

Let S_1, = $p \to q$, S_2 = q and S = p

∴ Given argument is S_1, S_2 I— S.

Truth values of S_1, S_2, S

p	q	S_1 $(p \to q)$	S_2 (q)	S (p)
T	T	T	T	T
T	F	F	F	T
F	T	T	T	F
F	F	T	F	F

In the 1st row, S_1, S_2 are true and S is true. In the 3rd row, S_1, S_2 are true but S is not true.

∴ Given argument is not valid.

2. Test the validity of the following argument:

"If it is cloudy tonight, it will rain tomorrow, and if it rains tomorrow, I shall be on leave tomorrow ; and the conclusion is if it is cloudy tonight, I shall be on leave tomorrow. "

Sol :

Let p = It is cloudy tonight,

q = It will rain tomorrow

and r = I shall be on leave tomorrow.

∴ The assumptions are $p \to q$, $q \to r$ and the conclusion is $p \to r$.

Let S_1 = $p \to q$, S_2 = $q \to r$ and S = $p \to r$.

Given argument is S_1, S_2 I— S.

Truth values of S_1, S_2, S

p	q	r	S_1 $(p \to q)$	S_2 $(q \to r)$	S $(p \to r)$
T	T	T	T	T	T
T	T	F	T	F	F
T	F	T	F	T	T
F	T	T	T	T	T
T	F	F	F	T	F
F	T	F	T	F	T
F	F	T	T	T	T
F	F	F	T	T	T

In the 1st, 4th, 7th , 8th rows, S_1, S_2 are both true and in each of these rows, S is also true.

$\therefore$ Given argument is valid.

Remark . In the following table, we show that $(S_1 \wedge S_2) \to S$ is a tautology.

S_1	S_2	S	$S_1 \wedge S_2$	$(S_1 \wedge S_2) \to S$
T	T	T	T	T
T	F	F	F	T
F	T	T	F	T
T	T	T	T	T
F	T	F	F	T
T	F	T	F	T
T	T	T	T	T
T	T	T	T	T

3. Test the validity of the following argument :

"If my son stands first in his class, I give him a gift. Either he stood first or I was out of station. I did not give son a gift this time. Therefore I, was out of station."

Sol :

Let p = My son stands first in his class,

q = I give him a gift

and r = I was out of station.

$\therefore$ The assumption are $p \to q$, $p \vee r$, $\sim q$ and the conclusion is r.

Let $S_1 = p \to q$, $S_2 = p \vee r$, $S_3 = \sim q$ and $S = r$

Given argument is S_1,S_2, S_3 I— S.

Truth values of S_1, S_2, S_3, S

p	q	r	S_1 $(p \to q)$	S_2 $(p \vee r)$	S_3 $(\sim q)$	S (r)
T	T	T	T	T	F	T
T	T	F	T	T	F	F
T	F	T	F	T	T	T
F	T	T	T	T	F	T
T	F	F	F	T	T	F
F	T	F	T	F	F	F
F	F	T	T	T	T	T
F	F	F	T	F	T	F

In the 7th row S_1, S_2, S_3 are all true and S is also true.

$\therefore$ Given argument is valid.

EXERCISE

1. Show that the following argument is not valid :

"If it rains, crops will be good. It did not rain. Therefore the crops were not good".

2. Show that the following argument is valid :

"If he works hard, he will be successful. He was not successful. Therefore he did not work hard".

3. Test the validity of the following argument:

"If today is Sunday, then yesterday was Saturday. Yesterday was not Saturday. Therefore, today is not Sunday."

4. Test the validity of the following argument:

"If it rains tomorrow, I shall carry my umbrella if its cloth is mended. It will rain tomorrow and the cloth will not be mended. Therefore, I shall not carry my umbrella".

5. Test the validity of the following argument:

"If Nidhi works hard then she will be successful. If she is successful then she will be happy. Therefore, hard work leads to happiness".

Test the validity of the following argument:

"Wages will increase if and only if there is an inflation. If there is an inflation then the cost of

living will increase. Wages increased. Therefore, the cost of living will increase.

ANSWERS

3. Valid 4. Not Valid 5. Valid 6. Valid.

Hints

1. Let p = It rains, q = Crops are good.
   $\therefore \quad S_1 = p \to q,\ S_2 = \sim p,\ S = \sim q.$
2. Let p = he works hard, q = He is successful.
   $\therefore \quad S_1 = p \to q,\ S_2 = \sim q,\ S = \sim p.$
3. Let p = Today is sunday, q = Yesterday is saturday.
   $\therefore \quad S_1 = p \to q,\ S_2 = \sim q,\ S = \sim p.$
4. Let p = It rains tomorrow, q = I shall carry my umbrella, r = Cloth of umbrella is mended.
   $\therefore \quad S_1 = p \to (r \to q),\ S_2 = p \wedge \sim r,\ S = \sim q.$
5. Let p = Nidhi works hard,
   q = She is successful
   and r = She is happy.
   $\therefore \quad S_1 = p \to q,\ S_2 = q \to r,\ S = p \to r.$
6. Let p = Wages will increase, q = There is an inflation, r = Cost of living increases.
   $\therefore \quad S_1 = p \leftrightarrow q,\ S_2 = q \to r,\ S_3 = p,\ S = r.$

USE OF VENN-DIAGRAMS FOR CHECKING THE VALIDITY OF ARGUMENTS

We have already studied the use of Venn-diagrams for finding truth values of statements. In the present section, we shall study the method of checking the validity of arguments by using Venn-diagrams.

We know that an argument is a statement which asserts that a given set of n statements $S_1, S_2, \ldots, S_n$ yield another statement S. This argument is valid if S is true whenever $S_1\ S_2, \ldots, S_n$ are all true.

In order to use Venn-diagrams, the truth of given hypotheses $S_1\ S_2, \ldots, S_n$ is represented by diagrams and then these diagrams are analysed to see whether these diagrams necessarily represent the truth of the conclusion, S, or not. In case, the truth of S is represented by the diagrams, then the given argument

$S_1, S_2, \ldots, S_n \vdash S$ is said to be valid, otherwise invalid.

WORKING RULES FOR SOLVING PROBLEMS

Step I. *Identify the 'assumptions' in the given argument and denote these as $S_1, S_2, S_3, \ldots\ldots, S_n$.*

Step II. *Identify the 'conclusion' in the given argument and denote this as S.*

Step III. *Represent the truth of $S_1, S_2, S_3 \ldots\ldots, S_n$ by Venn-diagrams.*

Step IV. *If these Venn-diagrams represent the truth of S then the argument $S_1, S_2, S_3, \ldots\ldots, S_n \vdash S$ is valid otherwise it is in valid.*

Remark. In practice, the assumptions S_1 S_2,....., S_n are written above a dotted line and the conclusion' S is written below this dotted line.

Example 1. Use Venn-diagrams to examine the validity of the argument: S_1 S_2 I— S where

S_1 : All teachers are honest

S_2 : Ramesh is not honest

.....

S: Ramesh is not a teacher.

Sol :

Let T = set of all teachers

and H = set of all honest persons.

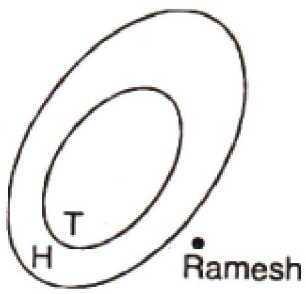

Truth of S_1, imply that $T \subseteq H$.

Truth of S_2 imply that 'Ramesh' $\notin$ H.

The Venn diagram shows that Ramesh $\notin$ T.

$\therefore$ Ramesh is not a teacher.$\in$

$\therefore$S is true.

$\therefore$ The given argument is valid.

2. Use Venn-diagrams to examine the validity of the argument S_1, S_2 ……..S where :

S_1 : All scholars are happy persons

S_2 : Naresh is not a happy person.

……..

S: Naresh is a scholar.

Sol.

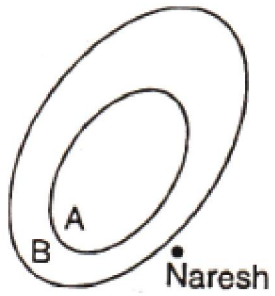

Let A = set of all scholars

and B = set of all happy persons.

Truth of S_1, imply that $A \subseteq B$.

Truth of S_2 , imply that 'Naresh' $\notin$ B.

The Venn-diagram shows that 'Naresh' $\notin$ A.

∴ Naresh is not a scholar

∴ S not true.

∴ The given argument is not valid.

3. **Example 3.** Use Venn-diagrams to examine the validity of the argument S_1 , S_2 ……. S where:

S_1 : Integers are rational numbers.

S_2 : x is a rational number.

……..

S: x is an integer.

Sol.

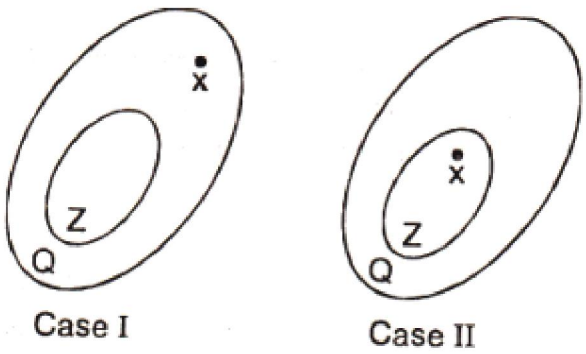

Let Z = set of all integers

and Q = set of all rational numbers.

Truth of S_1, imply that $Z \subseteq Q$.

Truth of S_2 ,imply that $x \in$ **Q.**

In **case I,** the Venn-diagram shows x is not an integer.

In **case II,** the Venn-diagram shows that x is an integer.

∴ S is not necessarily true.

∴ The given argument is not valid.

4. Test the validity of the following argument by using Venn-diagrams :

"If it is a good watch, then it is a Titen watch. It is a Titen watch therefore it is a good watch ".

Sol.

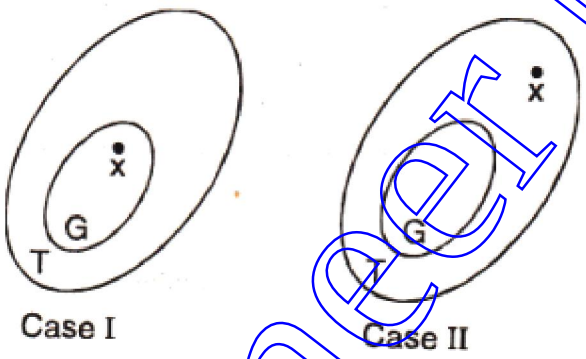

Let G = Set of good watches.

and T= Set of Titen watches.

Let S_1 : If it is good watch then it is a Titen watch.

and S_2: It is a Titen watch.

Truth of S_1, imply that $G \subseteq T$.

Truth of S_2, imply that the specific watch, say x, is in T.

In **case I,** $x \in G$ i.e., it is good watch.

In **case II,** $x \in G$ i.e., it is not a good watch.

∴ The 'conclusion' i.e., the specific watch is Titen is not necessarily true.

∴The given argument is not valid.

5. Test the validity of the argument S_1, S_2 ..... S by using Venn-diagrams, where :

S_1 : All prime numbers are natural numbers.

S_2 : All natural numbers are integers.

.....

S: All prime numbers are integers.

Sol:

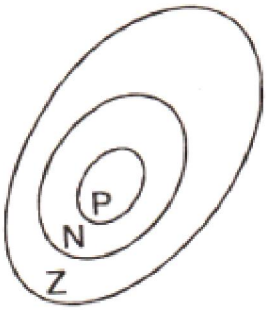

P = Set Of all prime numbers.

N = Set of all natural numbers.

and Z = Set of all integers.

Truth of S_1 imply that $P \subseteq N$.

Truth of S_2 imply that $N \subseteq Z$.

The Venn-diagram shows that $P \subseteq Z$ i.e., all prime numbers are integers.

∴ S is true.

∴ The given argument is valid.

Exercise

Use Venn-Diagrams to examine the validity of the argument S_1, S_2, ...S where:

1. S_1 : All basket ball players are tall.

S_2 : Mohan is not tall.

……..

S: Mohan is not a basket-ball player.

Ans:

Valid

2. S_1: All teachers are well dressed.

S_2: Rohit is a teacher.

……..

S: Rohit is well dressed.

Ans:

Valid

3. S_1: All teachers are absent minded.

S_2: Mahinder is not absent minded.

……..

S: Mahinder is a teacher.

Ans:

Invalid

4. S_1: All graduates are employed.

S_2: Monica is not employed.

……..

S: Monica is employed.

Ans:

Invalid

5. S_1 = All natural numbers are integers.

S_2 = x is an integer.

……..

S: x is a natural number.

Ans:

Invalid

6. S_1, = All natural numbers are real numbers.

S_2 = y is a real number.

……

S = y is not a natural number.

Ans:

Invalid

7. S_1 : If a person is educated then he is happy.

S_2 : If a person is happy then he lives long.

……

S: Educated persons lives long.

Ans:

Valid

APPLICATIONS OF LOGIC IN SWITCHING CIRCUITS

We know that a switching circuit is an arrangement of wires and switches connected together to the terminal of a battary. A switch is a two state device used for allowing current to pass through it or not to pass through it.If current is allowed to pass through a switch then it is said to be **'closed'** or **'on'.** If current is not allowed to pass through a switch then it is said to be **'open'** or **'off.**Since a logical statement is either true or false, there exists close anology between switches and statements. There are two connectives $\wedge$ and $\vee$ to combine two statements. Similarly there exists two methods of connecting two switches. Two switches can be connected either in series or in parallel.

(i) **Connecting switches in series.** Two switches s_1 and s_2 are connected in series as shown in the diagram. The lamp is 'on' if and only if the switches s, and s_2 are both closed.

Let p, q be the statements defined as follows :

p : switch s_1 is closed

q : switch s_2 is closed

l: lamp L is on.

Since, lamp is 'on' if and only if switches s_1 and s_2 are both closed. We have $p \wedge q \equiv l$.

(ii) **Connecting switches in parallel.** Two switches s_1, and s_2 are connected in parallel as shown in the diagram. The lamp is 'on'if and only if at least one of the switches s_1 and s_2 are closed.

Let p,q,l be the statements defined as follows':

p : switch s_1 is closed

q: switch s_2 is closed

l: lamp L is on.

Since, lamp is 'on' if and only if at least one of the switches $s_1$and s_2 is closed, we have $p \vee q \equiv l$.

REPRESENTATION OF SWITCHING CIRCUITS IN TERMS OF STATEMENTS AND LOGICAL CONNECTIVES ~, $\wedge$ AND $\vee$

We have studied the method of writing two switches in series and in parallel in terms of statements and connectives $\wedge$ and $\vee$.

In a switching circuit, switches need not act independently of each other. The following rules are observed in this regard :

(i) If two or more switches open or close simultaneously, then these switches are denoted by the same letter.

(ii) If s_1 and s_2 are two switches such that s_2 is closed when s_1 is open and s_2 is open when s_1 is closed, then s_2 is written as s_1'.

Remark. If p : switch s is closed, then ~ p represent the statement : switch s is open.

WORKING RULES FOR SOLVING PROBLEMS

Rule I. If p and q respectively represent the statements that switches s_1 and s_2 are closed, then the statement that s_1 and s_2 are connected in series is represented by $p \wedge q$.

Rule II. If p and q respectively represent the statements that switches s_1 and s_2 are closed, then the statement that s_1 and s_2 are connected in parallel is represented by $p \vee q$.

Rule III. If two or more switches open or close simultaneously then these switches are represented by the same letter.

Rule IV. If s_1 and s_2 are switches such that s_2 is closed when s_1 is open and s_2 is open when s_1 is closed, then s_2 is written as s_1' .

Rule V. If p represent the statement that switch s is closed, then ~ p represent the statement that the switch s is open.

1. Express the following circuit in the symbolic form of logic.

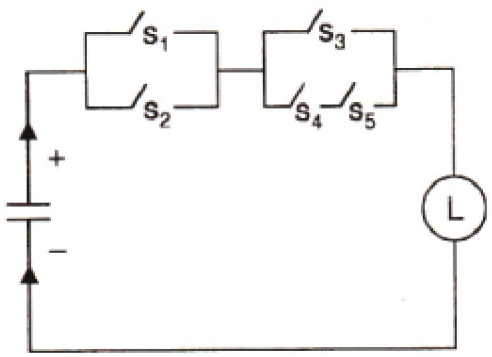

Sol.

Let p, q, r, s, t be the statements defined as follows :

p : switch s_1 is closed q : switch s_2 is closed r: switch s_3 is closed

s : switch s_4 is closed t: switch s_5 is closed.

In the circuit, we observe that the lamp is 'on' if and only if:

(i) s_1 is closed or s_2 is closed and (ii) s_3 is closed or s_4, s_5 are closed.

∴ The given circuit in symbolic form of logic can be written as $(p \vee q) \wedge [r \vee (s \wedge t)]$.

2. Express the following circuit in symbolic form of logic.

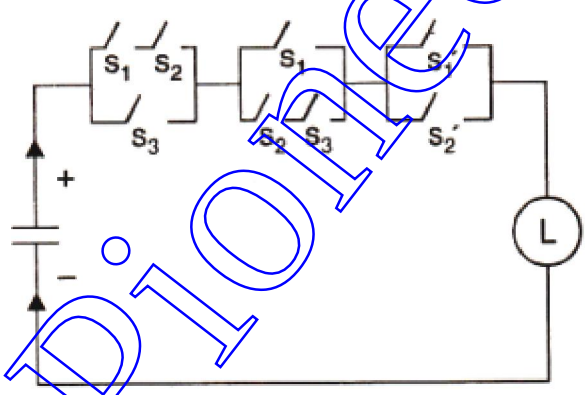

Sol.

Let p, q, r be the statements defined as follows :

p : switch s_1 is closed q : switch s_2 is closed r: switch s_3 is closed.

In the circuit, we observe that the lamp is 'on' if and only if:

(i) s_1 , s_2 are closed or s_3 is closed and

(ii) s_1 is closed or s_2, s_3' are closed and

(iii) s_1' is closed or s_2' is closed.

The given circuit in symbolic form of logic can be written as

$[(p \wedge q) \vee r] \wedge [p \vee (q \wedge \sim r)] \wedge [\sim p \vee \sim q]$.

3. Construct a circuit for the statement :

$(p \wedge q \wedge \sim r) \vee (\sim p \wedge (q \vee \sim r))$.

Sol. The statement is $(p \wedge q \wedge \sim r) \vee (\sim p \wedge (q \vee \sim r))$. ...(1)

Let s_1, s_2, s_3 be switches such that:

p : switch s_1 is closed q : switch s_2 is closed r: switch s_3 is closed.

(1) implies that circuits corresponding to $p \wedge q \wedge \sim r$ and $\sim p \wedge (q \vee \sim r)$ and $\sim p \wedge (q \vee \sim r)$ are connected in parallel. $p \wedge q \wedge \sim r$ implies that the switches s_1, s_2, $s_3'$are connected in series.

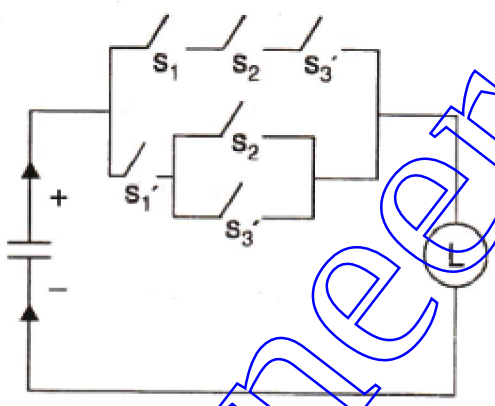

$\sim p \wedge (q \vee \sim r)$ implies that s_1' and the circuit corresponding to $q \vee \sim r$ are arranged in series.

$q \vee \sim r$ implies that s_2 and s_3' are connected in parallel.

∴ The circuit of the given statement is given in the diagram.

4. Construct a circuit for the statement:

$[(p \wedge q) \vee r] \wedge [\sim p \vee (q \wedge \sim r)] \wedge [\sim p \vee r]$.

Sol.

The given statement is

$[(p \wedge q) \vee r] \wedge [\sim p \vee (q \wedge \sim r)] \wedge [\sim p \vee r]$.

Let s_1, s_2, s_3 be switches such that:

p : switch s_1 is closed. q : switch s_2 is closed r: switch s_3 is closed.

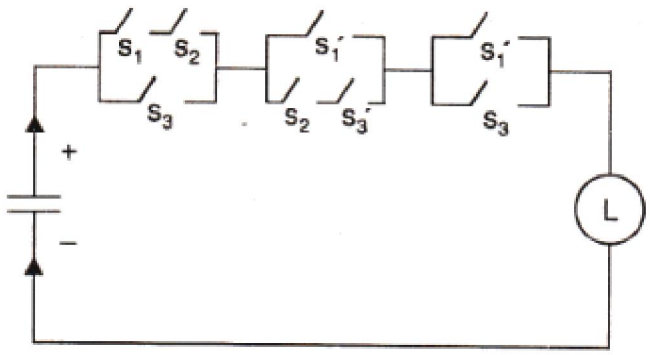

(1) implies that circuits corresponding to $(p \wedge q) \vee r, \sim p \vee (q \wedge \sim r)$ and $\sim p \vee r$ rare connected in series. $(p \wedge q) \vee r$ implies that the circuit corresponding to $p \wedge q$ and s_3 are connected in parallel. $\sim p \vee (q \wedge \sim r)$ implies that s_1' and the circuit corresponding to $(q \wedge \sim r)$ are connected in parallel. $\sim p \vee r$ implies that s_1' and s_3 are connected in parallel. ∴ The circuit of the given statement is given in the diagram.

5. Give an alternative arrangement of the following circuit such that the new circuit has only two switches.

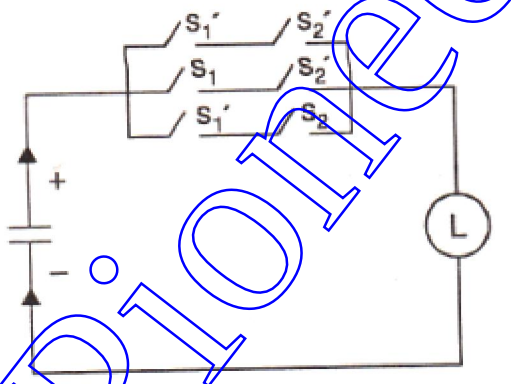

Sol. Let p, q, r statements defined as follows :

p : switch s_1 is closed q : switch s_2 is closed r : switch s_3 is closed.

In the circuit, we observe that the lamp is 'on' if and only if:

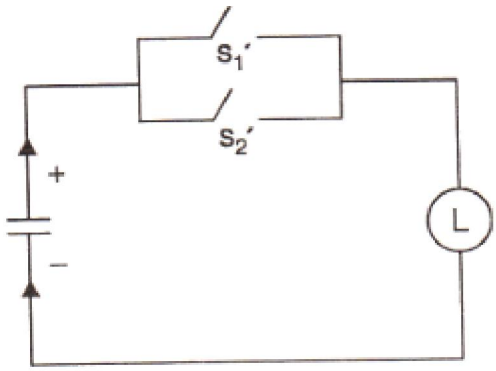

(i) s_1' and s_2' are closed.

or

(ii) s_1, and , s_2' are closed.

or

(iii) s_1' and s_2 are closed.

∴The given circuit in symbolic form of logic can be written as

$(\sim p \wedge \sim q) \vee (p \wedge \sim q) \vee (\sim p \wedge q)$.

Now

$$
\begin{aligned}
&(\sim p \wedge \sim q) \vee (p \wedge \sim q) \vee (\sim p \wedge q) \\
&\equiv [(\sim q \wedge \sim p) \vee (\sim q \wedge p)] \vee (\sim p \wedge q) && \text{(Using Commutative law)} \\
&\equiv [\sim q \wedge (\sim p \vee p)] \vee (\sim p \wedge q) && \text{(Using Distributive law)} \\
&\equiv (\sim q \wedge t) \vee (\sim p \wedge q) \\
&\equiv \sim q \vee (\sim p \wedge q) && (\because \ \sim q \wedge t \equiv \sim q) \\
&\equiv (\sim q \vee \sim p) \wedge (\sim q \vee q) && \text{(Using Distributive law)} \\
&\equiv (\sim q \vee \sim p) \wedge t && (\because \ \sim q \vee q \equiv t) \\
&\equiv \sim q \vee \sim p \quad \equiv \sim p \vee \sim q.
\end{aligned}
$$

∴ The given circuit is equivalent to a circuit in which s_1' and s_2' are connected in parallel.

6. Give an alternative arrangement of the following circuit such that the new circuit has minimum number of switches?

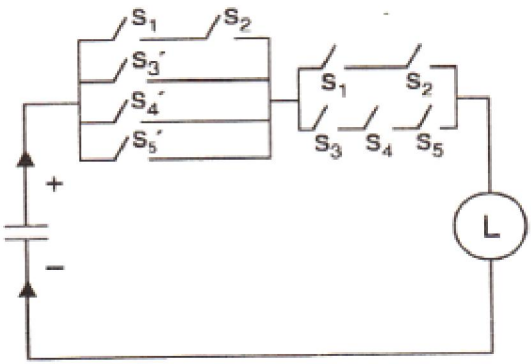

Sol. Let p, q, r, s ,t be statement defined as follows :

p: switch s_1 is closed.

q : switch s_2 is closed.

r: switch s_3 is closed.

s: switch s_4 is closed.

t: switch s_5 is closed.

In the circuit, we observe that the lamp is 'on' if and only if:

(i) s_1', $s_2'$are closed or ,s_3' is closed or $s_4'$is closed or $s_5'$is closed and (II) s_1, s_2 are closed or s_3 ,s_4, s_5 are closed.

∴The given circuit in symbolic form of logic can be written as :

$$[(p \wedge q) \vee \sim r \vee \sim s \vee \sim t] \wedge [(p \wedge q) \vee (r \wedge s \wedge t)].$$

Now $[(p \wedge q) \vee \sim r \vee \sim s \vee \sim t] \wedge [(p \wedge q) \vee (r \wedge s \wedge t)]$

$\equiv (p \wedge q) \vee [(\sim r \vee \sim s \vee \sim t) \wedge (r \wedge s \wedge t)]$ (Using Distributive law)

$\equiv (p \wedge q) \vee [(\sim (r \wedge s) \vee \sim t) \wedge (r \wedge s \wedge t)]$ (Using De Morgan's law)

$\equiv (p \wedge q) \vee [\sim (r \wedge s \wedge t) \wedge (r \wedge s \wedge t)]$

$\equiv (p \wedge q) \vee f \equiv p \wedge q.$

The given circuit is equivalent to a circuit in which the switches s_1 and s_2 are connected in series.

Exercise

1. Express the following circuit in symbolic form of logic.

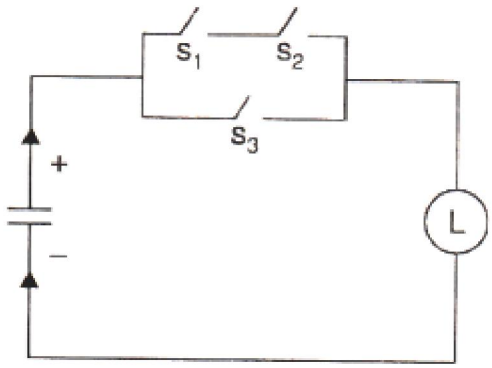

Sol:

$(p \wedge q) \vee r$ Where p, q, r correspond to s_1 ,s_2, s_3 respectively.

2. Express the following circuit in symbolic form of logic.

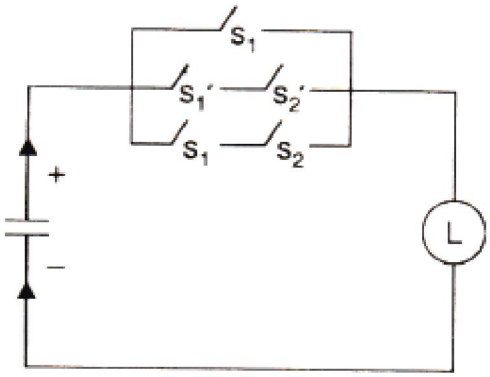

Sol:

$p \vee (\sim p \wedge \sim q) \vee (p \wedge q)$ Where p, q, r correspond to s_1, s_2 ,s_3 respectively

3. Express the following circuit in symbolic form of logic.

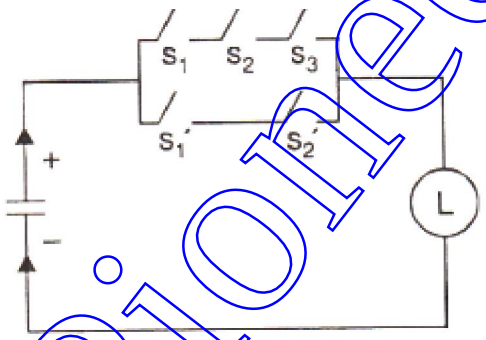

Sol:

$(p \wedge q \wedge r) \vee (\sim p \wedge \sim q)$ Where p, q, r correspond to ,s_1, s_2, s_3 respectively

4. Express the following circuit in symbolic form of logic.

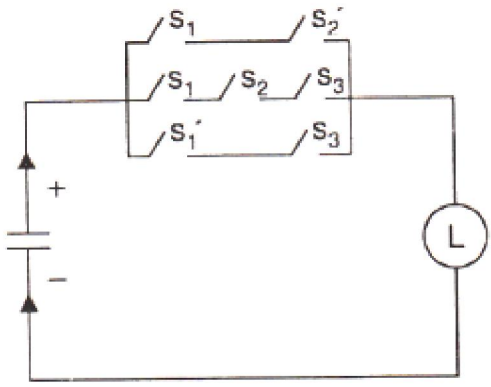

Sol:

$[p \wedge \sim q] \vee [p \wedge q \wedge r] \vee [\sim p \wedge r]$ Where p, q, r correspond to s_1, s_2, s_3 respectively

5. Construct a circuit for the statement:

$[p \vee q] \wedge [q \vee \sim r]$.

Sol:

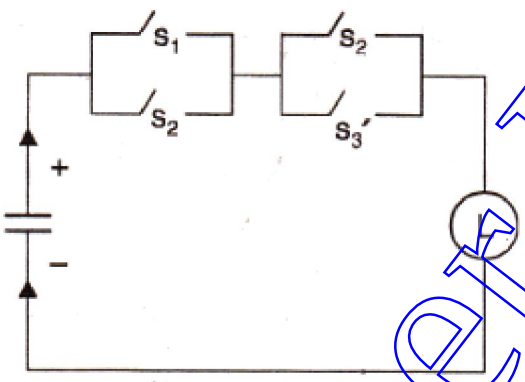

where S_1, S_2, S_3 correspond to p, q, r respectively

6. Construct a circuit for the statement:

$[\sim p \wedge q \wedge \sim r] \vee [(p \wedge q) \wedge r]$

Sol:

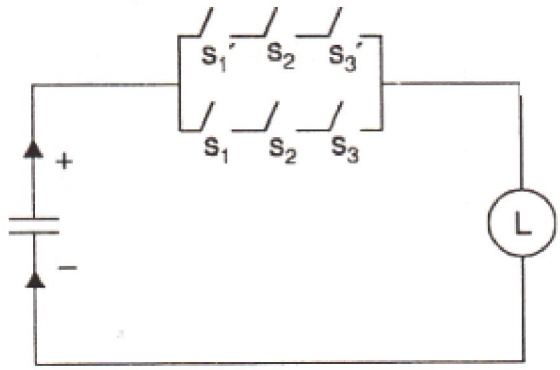

where s_1, s_2, s_3 correspond to p, q, r respectively

7. Construct a circuit for the statement:

$(p \wedge \sim q \wedge r) \vee (p \wedge (\sim q \vee \sim r))$.

Sol:

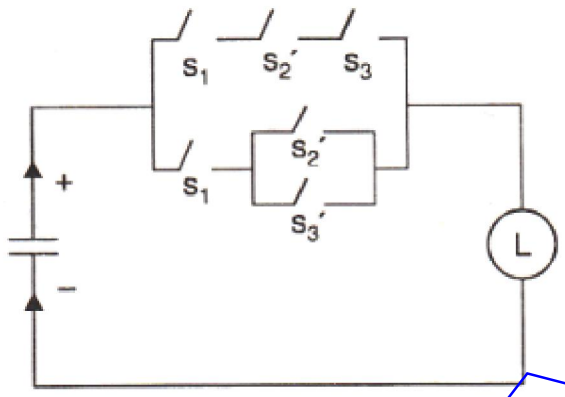

where s_1, s_2 , s_3 correspond to p, q, r respectively

8. Give an alternative arrangement of the following circuit such that the new circuit has minimum number of switches :

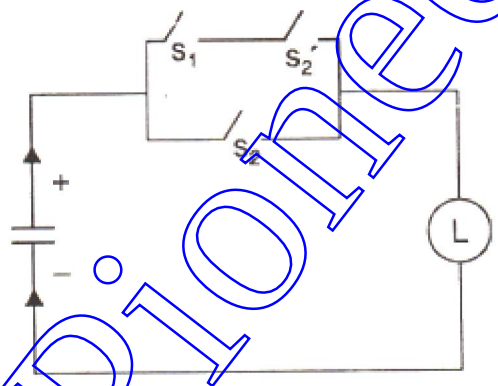

Sol:

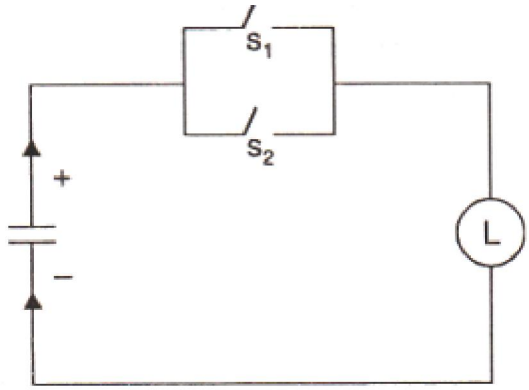

9. Give an alternative arrangement of the following circuit such that the new circuit has minimum number of switches:

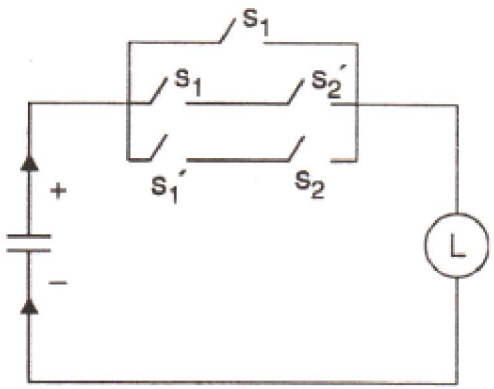

Sol:

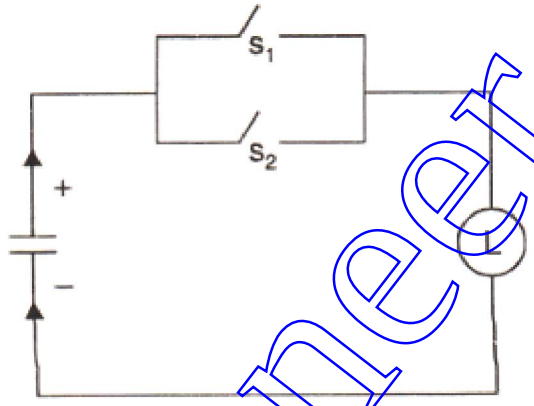

10. Give an alternative arrangement of the following circuit such that the new circuit has five switches only :

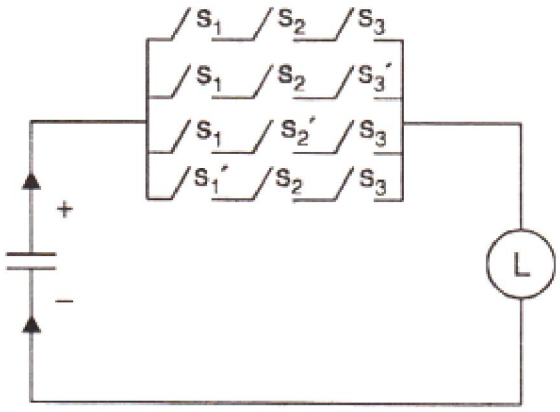

Sol:

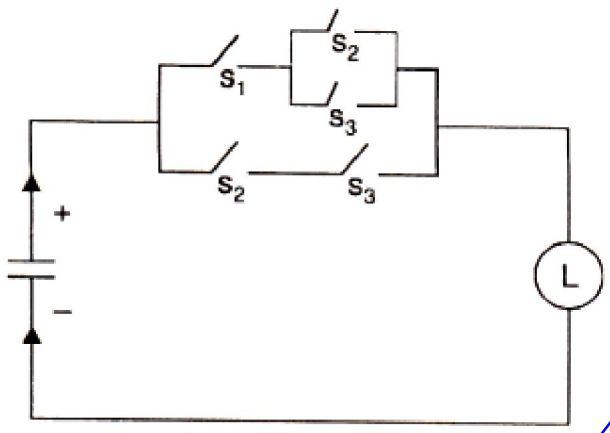

Hints

Let p, q, r correspond to switches s_1, s_2, s_3 respectively.

∴ Given circuit

$$\equiv (p \wedge q \wedge r) \vee (p \wedge q \wedge \sim r) \vee (p \wedge \sim q \wedge r) \vee (\sim p \wedge q \wedge r)]$$
$$\equiv [(p \wedge q \wedge r) \vee (p \wedge q \wedge \sim r)] \vee [(p \wedge q \wedge r) \vee (p \wedge \sim q \wedge r)] \vee [(p \wedge q \wedge r) \vee (\sim p \wedge q \wedge r)]$$
$$\equiv [(p \wedge q) \wedge (r \vee \sim r)] \vee [(p \wedge r) \wedge (q \vee \sim q)] \vee [(q \wedge r) \wedge (p \vee \sim p)]$$
$$\equiv [(p \wedge q) \wedge t] \vee [(p \wedge r) \wedge t] \vee [(q \wedge r) \wedge t]$$
$$\equiv (p \wedge q) \vee (p \wedge r) \vee (q \wedge r)$$
$$\equiv [p \wedge (q \vee r)] \vee (q \wedge r).$$

Revision Exercise

1. Find the truth values of the following statements:

(i) The roots of a quadratic equations may be real numbers.

(ii) Work is worship.

(iii) The union of two sets is not always defined.

(iv) The square of a real number is always positive.

(v) The result of Pythagoras theorem holds for any equilateral triangle.

2. By using Venn-diagrams, find the truth values of the following statements:

(i) Every male person is a human being.

(ii) There cannot be a male person who is not a human being.

(iii) There exists a human being who is not a male person.

(iv) Every human being is a male person.

3. Find the truth values of the following compound statements :

(i) $\sim [(p \wedge q) \vee \sim q]$

(ii) $(p \rightarrow q) \leftrightarrow (\sim p \vee q)$.

4. Find the truth values of the compound statement: $\sim [(p \wedge q) \vee \sim r]$.

5. Find the truth values of the following compound statements :

(i) $(p \vee q) \leftrightarrow r$

(ii) $(p \rightarrow q) \rightarrow r$.

6. Show that $p \vee \sim (p \wedge q)$ is a tautology.

7. Show that $[\sim (p \vee q)] \leftrightarrow (\sim p \wedge \sim q)$ is a tautology.

8. Show that $\sim [(p \wedge q) \wedge (\sim p \wedge \sim q)]$ is a fallacy.

9. Show that the compound statements: $p \rightarrow (q \wedge r)$ and $(p \rightarrow q) \wedge (p \rightarrow r)$ are logically equivalent.

10. Prove that:

(i) $(p \vee q) \vee r \equiv p \vee (q \vee r)$

(ii) $p \vee (q \wedge r) \equiv (p \vee q) \wedge (p \vee r)$.

11. By using laws of algebra of statements, show that: $\sim (\sim p \wedge q) \equiv p \vee \sim q$.

12. Find the negation of the compound statement: $\sim p \leftrightarrow \sim q$.

Answers

1. (i) T (ii) T (iii) F (iv) F (v) F

2. (i) T (ii) T (Hi) T (iv) F.

3.

p	q	(i)	(ii)
T	T	F	T
T	F	F	T
F	T	T	T
F	F	F	T

4.

p	q	r	$\sim[(p \wedge q) \vee \sim r]$
T	T	T	F
T	T	F	F
T	F	T	T
F	T	T	T
T	F	F	F
F	T	F	F
F	F	T	T
F	F	F	F

5.

p	q	r	(i)	(ii)
T	T	T	T	T
T	T	F	F	F
T	F	T	T	T
F	T	T	T	T
T	F	F	F	T
F	T	F	F	F
F	F	T	F	T
F	F	F	T	F

12.

$(\sim p \wedge q) \vee (\sim q \wedge p)$.

Typically Solved Questions

(For Competitive Examinations)

1. If p, q and r be any three statements, then show that the compound statements:

$p \to (q \wedge r)$ *and* $(p \to q) \wedge (p \to r)$ are logically equivalent.

Sol:

Truth values of $p \to (q \wedge r)$ and $(p \to q) \wedge (p \to r)$

p	q	r	$q \wedge r$	$p \to (q \wedge r)$	$p \to q$	$p \to r$	$(p \to q) \wedge (p \to r)$
T	T	T	T	T	T	T	T
T	T	F	F	F	T	F	F
T	F	T	F	F	F	T	F
F	T	T	T	T	T	T	T
T	F	F	F	F	F	F	F
F	T	F	F	T	T	T	T
F	F	T	F	T	T	T	T
F	F	F	F	T	T	T	T

∴ The true value of $p \to (q \wedge r)$ and $(p \to q) \wedge (p \to r)$ are same.

2.

Write the truth table for $l \leftrightarrow m$ where $l = (p \to q) \wedge (q \to p)$ and $m = p \leftrightarrow q$.

Sol:

Truth values of $l \leftrightarrow m$

p	q	$p \to q$	$q \to p$	$l = (p \to q) \wedge (q \to p)$	$m = p \leftrightarrow q$	$l \leftrightarrow m$
T	T	T	T	T	T	T
T	F	F	T	F	F	T
F	T	T	F	F	F	T
F	F	T	T	T	T	T

3. For three statements p, q, r show that :

$[(p \wedge \sim q) \vee (q \wedge \sim p)] \wedge (p \vee r) \equiv (p \vee q) \wedge (\sim q \vee \sim p) \wedge (p \vee r)$.

Sol:

Truth values of $[(p \wedge \sim q) \vee (q \wedge \sim p)] \wedge (p \vee r)$

p	q	r	$\sim p$	$\sim q$	$p \wedge \sim q$	$q \wedge \sim p$	$(p \wedge \sim q) \vee (q \wedge \sim p)$	$p \vee r$	$[(p \wedge \sim q) \vee (q \wedge \sim p)] \wedge (p \vee r)$
T	T	T	F	F	F	F	F	T	F
T	T	F	F	F	F	F	F	T	F
T	F	T	F	T	T	F	T	T	T
F	T	T	T	F	F	T	T	T	T
T	F	F	F	T	T	F	T	T	T
F	T	F	T	F	F	T	T	F	F
F	F	T	T	T	F	F	F	T	F
F	F	F	T	T	F	F	F	F	F

Truth values of $(p \wedge \sim q) \wedge (\sim q \vee \sim p) \wedge (p \vee r)$

p	q	r	$\sim p$	$\sim q$	$p \vee q$	$\sim q \vee \sim p$	$(p \vee q) \wedge (\sim q \vee \sim p)$	$p \vee r$	$(p \wedge \sim q) \wedge (\sim q \vee \sim p) \wedge (p \vee r)$
T	T	T	F	F	T	F	F	T	F
T	T	F	F	F	T	F	F	T	F
T	F	T	F	T	T	T	T	T	T
F	T	T	T	F	T	T	T	T	T
T	F	F	F	T	T	T	T	T	T
F	T	F	T	F	F	T	F	F	F
F	F	T	T	T	T	T	T	T	T
F	F	F	T	T	F	T	F	F	F

$\therefore$ $[(p \wedge \sim q) \vee (q \wedge \sim p)] \wedge (p \vee r)$ and $(p \wedge \sim q) \wedge (\sim q \vee \sim p) \wedge (p \vee r)$ have identical truth values.

$\therefore$ $$[(p \wedge \sim q) \vee (q \wedge \sim p)] \wedge (p \vee r) \equiv (p \wedge \sim q) \wedge (\sim q \vee \sim p) \wedge (p \vee r).$$

4. Test the validity of the following argument:

"Democracy can survive only if the electorate is well informed or no candidate for a public office is dishonest. The electorate is well informed only if education is free. If all candidates for public offices are honest, then democracy can survive. Therefore, democracy can survive only if education is free".

Sol.

Let p = Democracy survives,

q = Electorate is well informed,

r = Candidate for a public office is dishonest

and s = Education is free.

The assumptions are $(q \wedge \sim r) \rightarrow p$, $s \rightarrow q$, $\sim r \rightarrow p$ and the conclusion is $s \rightarrow p$.

Let $S_1 = (q \wedge \sim r) \rightarrow p$, $S_2 = s \rightarrow q$, $S_3 = \sim r \rightarrow p$ and $S = s \rightarrow p$.

$\therefore$ Given argument is $S_1, S_2, S_3 \vdash S$.

Truth values of p_1, p_2, p_3, Q

p	q	r	s	$\sim r$	$q \wedge \sim r$	S_1 $((q \wedge \sim r) \rightarrow p)$	S_2 $(s \rightarrow q)$	S_3 $(\sim r \rightarrow q)$	S $(s \rightarrow p)$
T	T	T	T	F	F	T	T	T	T
T	T	T	F	F	F	T	T	T	T
T	T	F	T	T	T	T	T	T	T
T	F	T	T	F	F	T	F	T	T
F	T	T	T	F	F	T	T	T	F
T	T	F	F	T	T	T	T	T	T
T	F	F	T	T	F	T	F	T	T
F	F	T	T	F	F	T	F	F	F
T	F	T	F	F	F	T	T	T	T
F	T	F	T	T	T	F	T	F	F
F	T	T	F	F	F	T	T	T	T
F	F	F	T	T	F	T	F	F	F
F	F	T	F	F	F	T	T	T	T
F	T	F	F	T	T	F	T	T	T
T	F	F	F	T	F	T	T	T	T
F	F	F	F	T	F	T	T	T	T

In the 5th row, S_1, S_2, S_3 are all true but S is not true.

$\therefore$ Given argument is not valid.